Table of Content| Installation Instructions | Passenger Cars | Part 1 (A-J)

- General Information:
- About these instructions / How to use?
- Change of connections when making use of only DataclíQ (Navman)
- Release notes
- Squarell FLEX wiring loom layout
- Squarell SOLID wiring loom layout
- Squarell REMOTE wiring loom layout

- Vehicle Installation Manuals:
- Alfa Romeo Guilietta (typ 940) 2010+
- Alfa Romeo Mito (typ 955) 2008+
- Audi A1 (typ 8X) 2010+
- Audi A3 (typ 8V) 2012+
- Audi A4 (typ B7/8E/8H) 2004-2008
- Audi A4 (typ B8/8K) 2007-2015
- Audi A4 (typ B9/8W) 2016+
- Audi A5 (typ 8T) 2007-2016
- Audi A6 (typ C6/4F) 2004-2011
- Audi A6 (typ C7/4G) 2011+
- Buick Encore (1st gen) 2013+
- Buick Regal (5th gen) 2010-2017
- Buick Velite 5 2011-2015
- BMW 1-Series (E81,E82,E87,E88) 2007-2013
- BMW 1-Series (F20,F21) 2011+
- BMW 3-Series (E90-E93) 2007-2012
- BMW 3-Series (F30,F31,F34) 2012+
- BMW 4-Series (F32,F33,F36) 2014+
- BMW 5-Series (F10,F11) 2010-2016
- BMW 5-Series (G30, G31) 2017+
- BMW 6-Series (F06/F12/F13) 2011-2018
- BMW 7-Series (F01/F02/F03/F04) 2008-2015
- BMW 7-Series (G11,G12) 2016+
- BMW X5 (F15) 2013+
- BMW X6 (F16) 2014-2018
- Cadillac XTS (1st gen) 2012+
- Citroën Berlingo Multispace (E) 2018+
- Citroën C1 (P) 2014+
- Citroën C3 (C) 2004-2010
- Citroën C3 (S) 2009-2016
- Citroën C3 (2) 2016+
- Citroën C4 (N) 2004-2010
- Citroën C4 (L) 2010-2014
- Citroën C4 Cactus (0) 2014+
- Citroën C4 Picasso (U) 2006-2013
- Citroën C4 Picasso (3) 2013+
- Citroën C5 (1st gen) 2004-2008
- Citroën C5 (R) 2007-2017
- Citroën DS3 (A5FD) 2009-2015
- Citroën DS4 (N) 2010-2015
- Citroën SpaceTourer (3) 2016+
- Chevrolet Cruze (J300) 2008-2016
- Chevrolet Trax (KL1B) 2013+
- Chevrolet Volt (D1JCI) 2011-2015
- Dacia Dokker (1st gen) 2012+
- Dacia Dokker Stepway (SD) 2012+
- Dacia Duster (SD) 2010-2018
- Dacia Logan (SD) 2012+
- Dacia Sandero (SD) 2012+
- Dacia Spring DBG 2021+
- Dodge Caravan (5th gen) 2008+
- DS DS3 (S) 2015+
- DS DS4 Crossback (N) 2016-2018
- Fiat 500 (typ 312) 2007+
- Fiat 500L (typ 330) 2012+
- Fiat 500X (typ 334) 2014+
- Fiat Bravo (typ 198) 2008-2014
- Fiat Panda (typ 319) 2011+
- Fiat Punto evo (typ 199) 2009-2012
- Fiat Punto (typ 199) 2012+
- Fiat Qubo (3rd gen) 2006+
- Fiat Tipo (typ 356, 357, 358) 2015+
- Ford US Edge (MK1 facelift) 2011-2014
- Ford US Escape (MK3) 2013-2019
- Ford US Explorer (MK5) 2011+
- Ford US Fusion (MK2) 2013+
- Ford B-Max (JK) 2012-2017
- Ford C-Max (DM2) 2009-2011
- Ford C-Max (DXA) 2011-2017
- Ford EcoSport (JK8) 2012+
- Ford Fiesta (JA8) 2008-2017
- Ford Fiesta (HF/HJ) 2018+
- Ford Focus (DA3) 2008-2011
- Ford Focus (DYB) 2010-2018+
- Ford Galaxy (MK2) 2006-2015
- Ford Taurus MK6 2010-2017
- GMC Yukon 2007-2014 (3rd gen)
- Ford Ka (MK2) 2009-2016
- Ford Ka+ (MK3) 2017+
- Ford Kuga (DM2) 2008-2012
- Ford Kuga (DM2) 2012-2019+
- Ford Mondeo (BA7) 2007-2014
- Ford Mondeo (C) 2014+
- Holden Commodore (VE) 2006-2013
- Holden Volt (1st gen) 2011-2015
- Honda Civic (FD3) 2008-2012
- Honda Civic (FK3) 2011-2016
- Honda Civic (FC) 2017+
- Honda CR-V (RE5) 2006-2011
- Hyundai H-1 Traveler/ Grand Starex (TQ) 2007+
- Hyundai I10 (PA) 1st gen 2007-2017
- Hyundai i20 (2nd gen) 2014+
- Hyundai i30 (2nd gen) 2011-2016
- Hyundai i40 (1st gen) 2011+
- Hyundai IoniQ EV 2018+
- Hyundai Kona (1st gen) 2017+
- Hyundai Kona EV 2019+
- Hyundai Santa Fe (DM, NC) 2012-2019
- Hyundai Tucson (JM) 2006-2010
- Hyundai Tucson (TL) 2015+
- Hyundai ix35 (LM) 2009-2015
- Jaguar F-Type 2013+

About these instructions | How to Use

About

These instructions are to be used by technically skilled persons.
These installation instructions are applicable to Squarell products only. It instructs the installer how to connect Squarell equipment to the vehicle data network and power supply.
Squarell makes no representations or warranties, expressed or implied, with respect to the accuracy, completeness or reliability of this document.

Important

Read these instructions carefully and in full, before you proceed installing. Installation of Squarell equipment may only performed by Squarell trained specialists, or under supervision of Squarell.
Professional installation equipment and tools are to be used. Ignition key should be switched off before installing Squarell equipment. Country specific rules for installation are to be taken in consideration. Vehicle manufacturer specific rules for installation are to be taken in consideration.
All Squarell equipment are complying to E-standards.

Before starting any work: Check if the digital tachograph has NO driver cards inserted. (Let the driver remove the cards)

If you have to un-power the tachograph, please inform the vehicle owner, as the tachograph must be checked by a tacho service station afterwards.

Power connections, ground and fusing

Squarell products are meant to be used in automotive and harsh environments with normal supply voltages of 12 and 24 volts.
The power supply can range between 8 and 48 volts, the units are resistant to supply disturbances as described in the E-certification documents.
If Squarell products are used in a one-system design, please use 1 fuse for supply power protection and 1 common ground connection for the total system.

Electrical Connections to existing wiring

If electric connections are made to existing wiring looms, please use proper crimping tools. If welding joints are made, observe that welding joints are properly isolated.

CANcliQ and DatacliQ connections

CANcliQ and DatacliQ connections are **non-electrical** joints to the vehicle network, please observe that the CANcliQ is clamped around undamaged cable wire isolation.

Mounting Squarell devices to the vehicle structure

Use tie wraps or fixing tape to fix the Squarell unit to the structure of the vehicle. Take care that vibration and noise is avoided when operational.

Mounting cables

Please use cable ties to mount Squarell cables to existing wiring looms. Cables must not be mounted under tension. Avoid cable nick when bundling cables together.

Post-installation

General -To test the installation- The Squarell LED is green when ignition is on.
If the LED is red, check if the connected equipment (like telematics) is on.
Follow the testing routines of the connected equipment.
After correct installation, take pictures of the electrical connections to the vehicle and the connected equipment.
This pictures can be used as reference of performed work and proper installation.

Technical support

Support:	support.squarell.com
Fax:	+31 (0) 252 41 36 29
Telephone:	+31 (0) 252 42 02 39 (working days 9:00 – 17:00 GMT+1)

Copyright:

All Squarell written manuals, training, presentations and installation instructions are subject to Squarell copyright. Reproduction may only be made for internal training or support purposes. Reproduction for external purposes are only allowed after written approval from Squarell.

How to Use

Select vehicle page (left hand side). **The colors on the vehicle page are vehicle colors**.
Select device and connection (right hand side). The colors on the device page are Squarell colors.

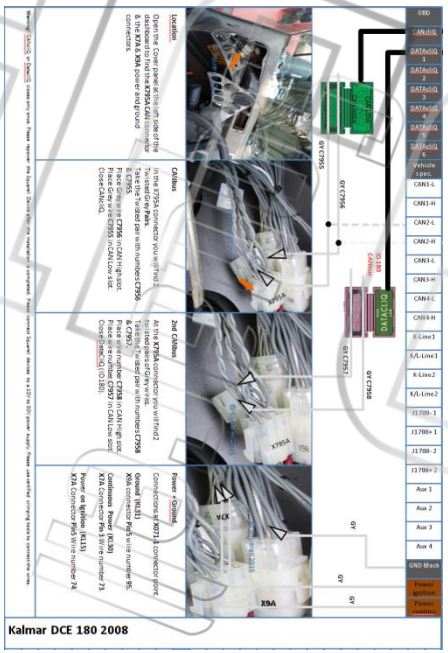

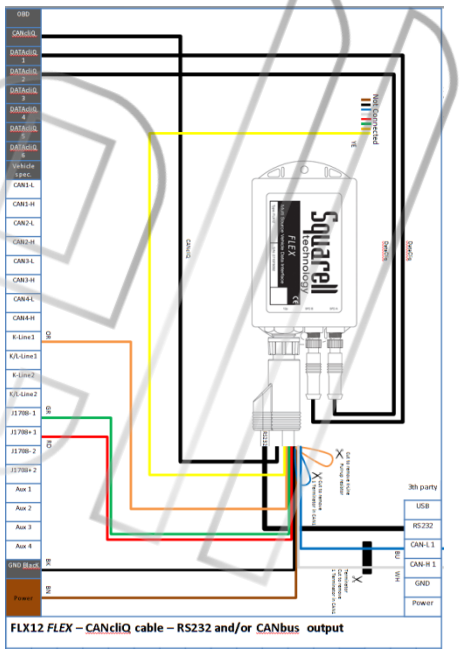

Change of connections when making use of only DatacliQ (Navman)

About

This additional page is for the use with Navman devices or any other Squarell device with only DatacliQ input connections of Squarell Technology.

	Can1	Can2	Can3	J1708	ISO
Standard		ID 180	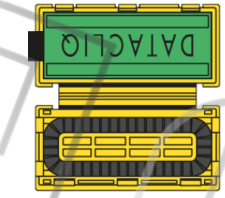 ID 181	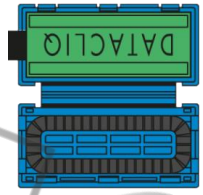 ID 280	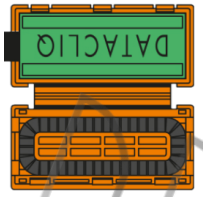 ID 190
Only DatacliQ	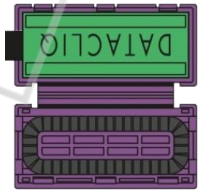 ID 180	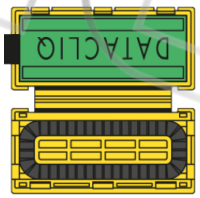 ID 181	N.A.	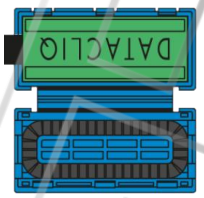 ID 280	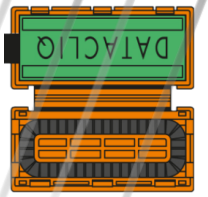 ID 190

Version	Description
190116	Added Mercedes C-Class (W205)
190216	Added Mercedes CLA (C117 and C118)
190308	Added Hyundai Tucson (2nd gen) 2016+,
190313	Added Citroën Berlingo Multispace 2018+
190902	Revised the manuals for updated generations and years
190930	Added: Ford Taurus MK6 2010-2017, GMC Yukon 200702014 (3rd gen)
191108	Split Manuals in 3 parts, Added BMW 6-Series (F06/F12/F13) 2011-2018, BMW 7-Series (F01/F02/F03/F04) 2008-2015, BMW X6 (F16) 2014-2018, Hyundai ix35 (LM) 2009-2015, Jaguar F-Type 2013+
191115	Hyundai I10 (PA) 1st gen 2007-2017
191204	Minor fixes to the manuals regarding wire colour codes
191206	Added Hyundai Kona (1st gen) 2017+
200331	Revised the manuals for updated generations and years
201229	Datacliq colors changed
210108	Added: Hyundai IoniQ EV 2018+, Hyundai Kona EV 2019+
210305	Added: Ford Focus (4th gen) 2018+, Ford Fiesta (HF/HJ) 2017+, Ford Ka+ (MK3) 2017+
220308	Added REMOTE connection overview

Version 151102 ENG
Copyright © Squarell 2015

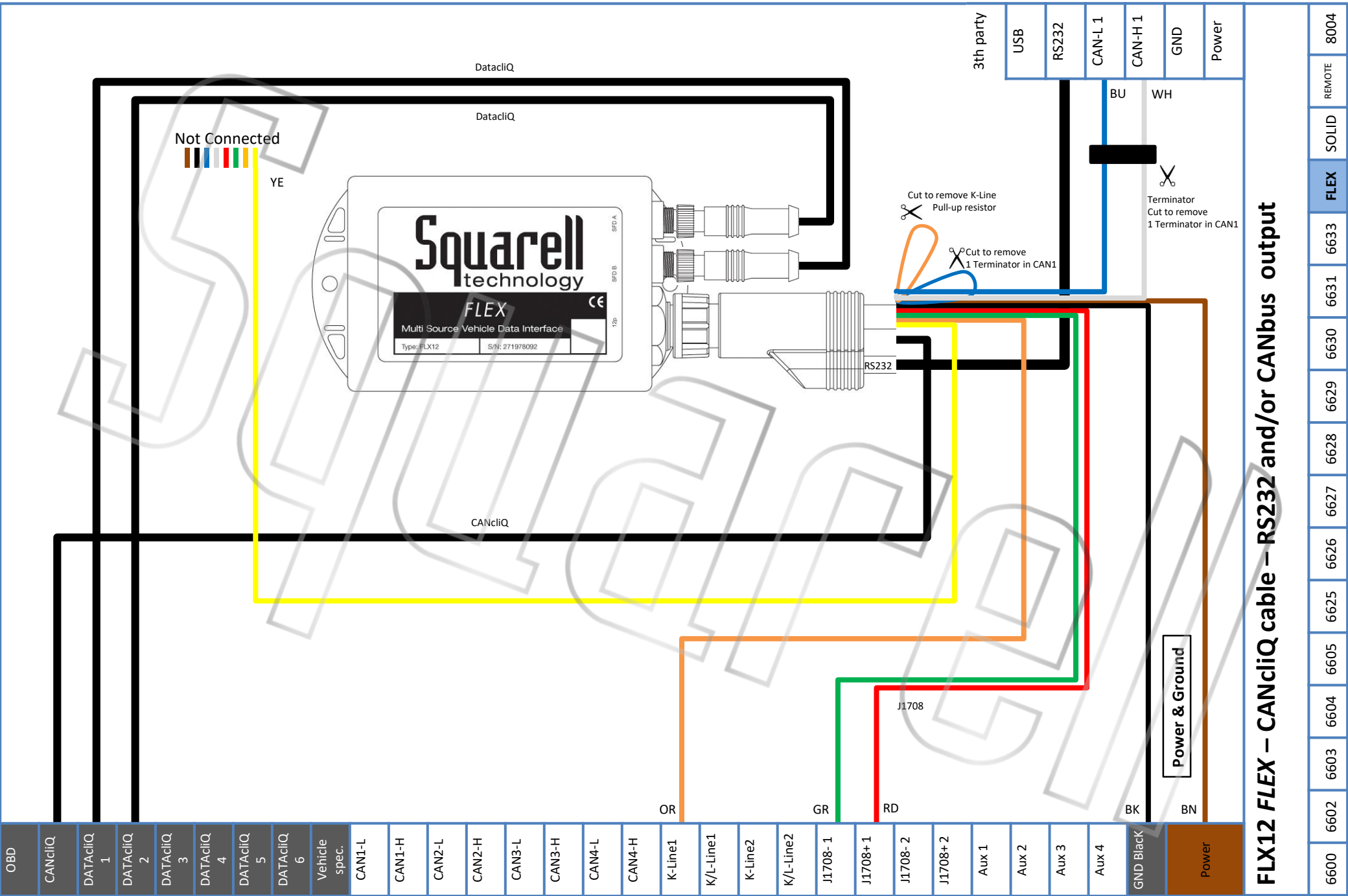

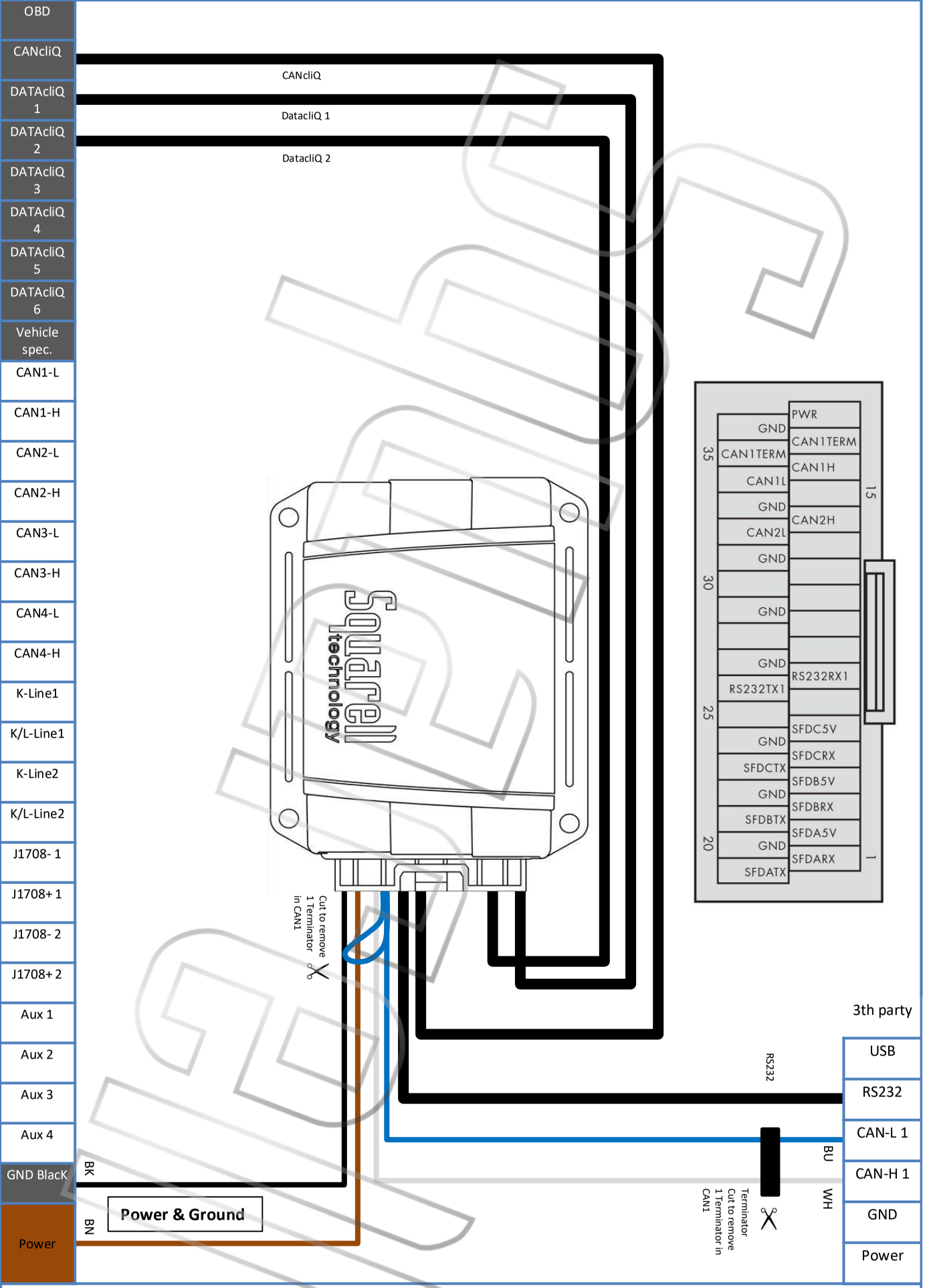

SLD36 *SOLID* – CANcliQ cable – RS232 and/or CANbus output

6600	6602	6603	6604	6605	6625	6626	6627	6628	6629	6630	6631	6633	FLEX	**SOLID**	REMOTE	8004

Version 220308 ENG
Copyright © Squarell 2022

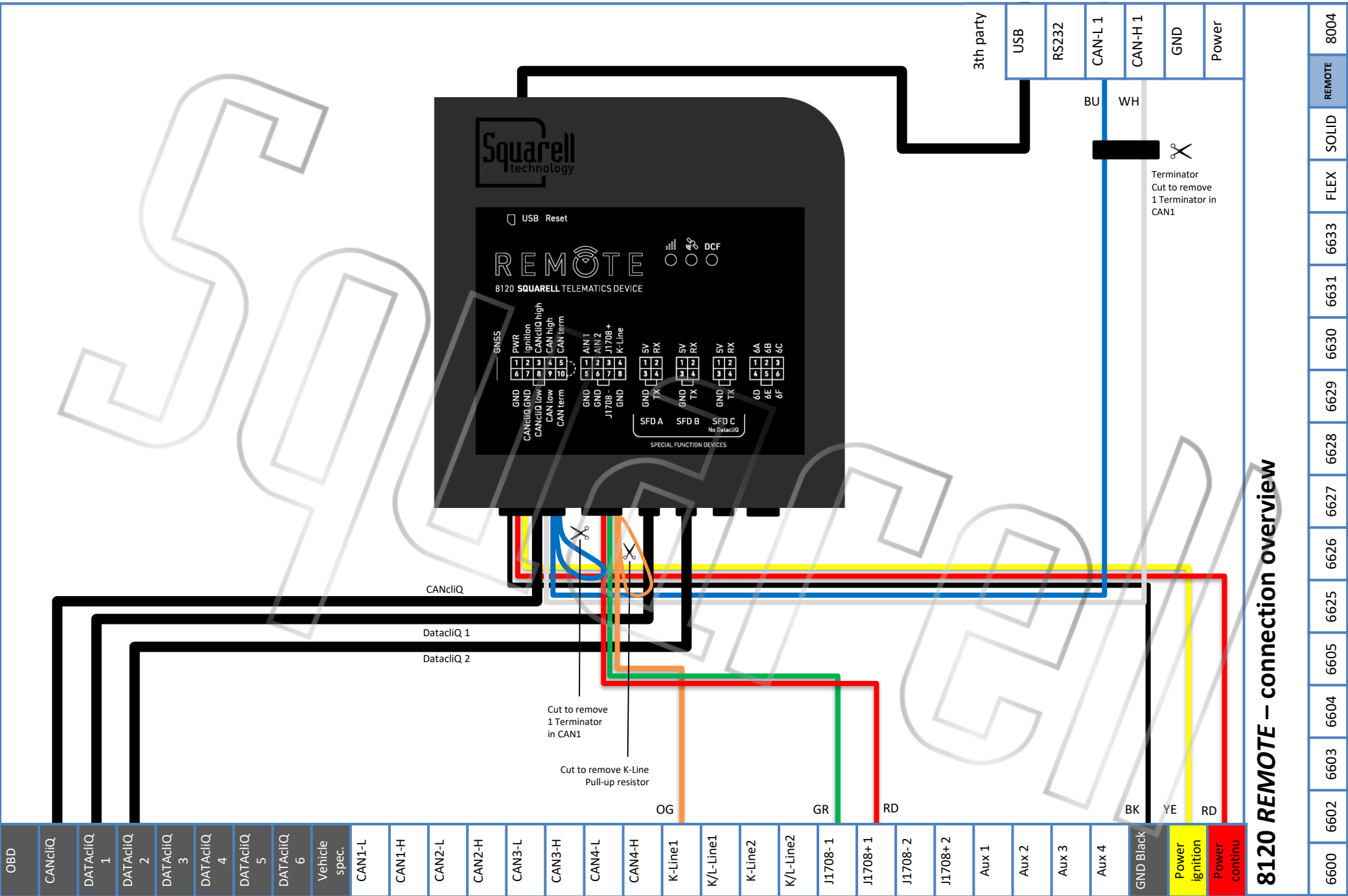

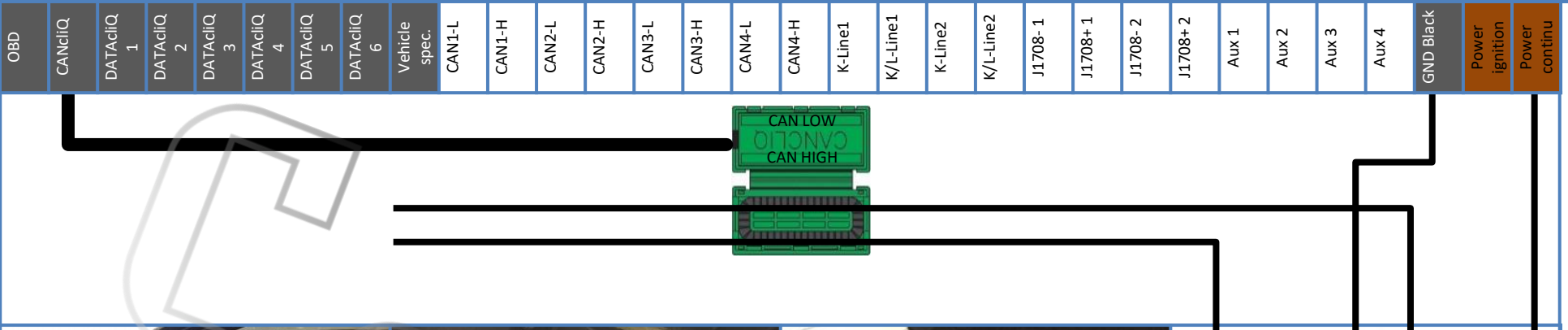

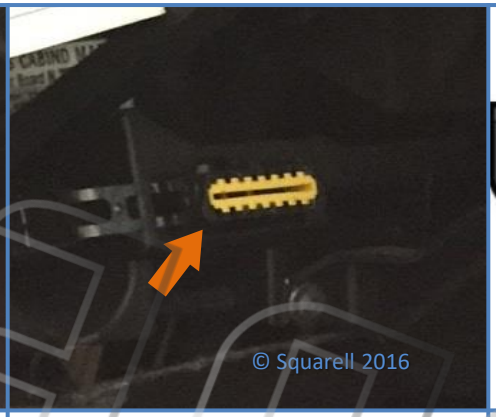

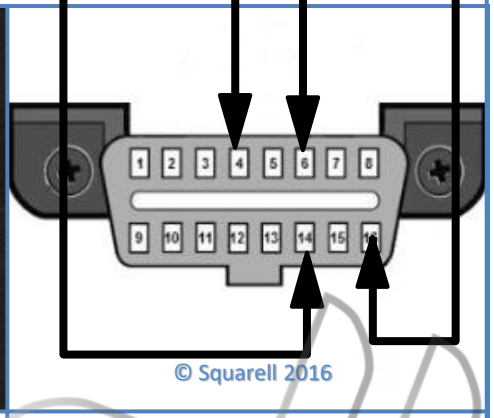

Location

Remove the dashboard panel behind the steering wheel to get to the OBD connector.

Remove the OBD connector from the clip to get access.

CANbus

Untwist the pin 6 and 14 wires.

Place the wire of pin 6 in the CAN High Slot.
Place the wire of pin 14 in the CAN Low slot.
Close CANcliQ.

Power + Ground
Connections in OBD connector

Ground (KL31) :
OBD Connector pin 4 and pin 5.

Continuous Power (KL30) :
Pin 16 OBD connector.

Warning! CANcliQ or DatacliQ closes only once. Please repower the Squarell Device after the installation is completed. Please connect Squarell devices to a 10V to 30V power supply. Please use certified crimping tools to connect the wires.

Alfa Romeo Guilietta (typ 940) 2010 +

A B C D E F G H I J K L M N O P Q R S T U V W X Y Z

Copyright © Squarell 2016

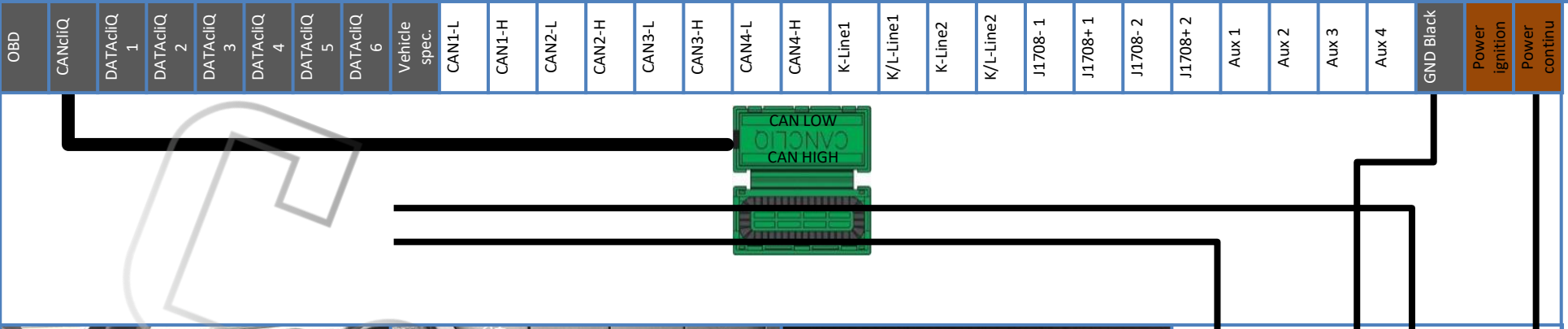

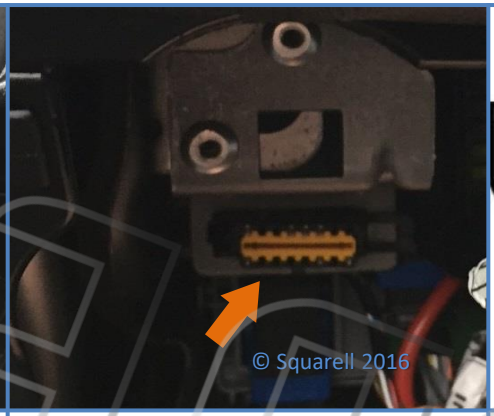

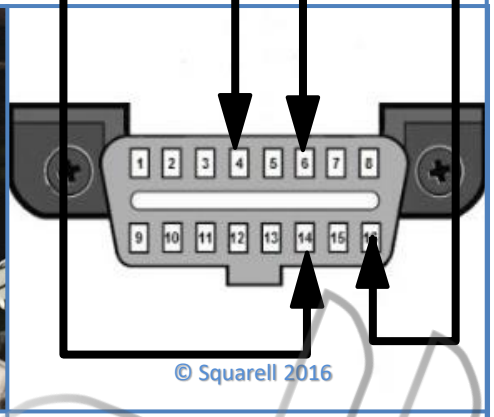

Location

Remove the dashboard panel behind the steering wheel to get to the OBD connector.

Remove the OBD connector from the clip to get access.

CANbus

Untwist the pin 6 and 14 wires.

Place the wire of pin 6 in the CAN High Slot.
Place the wire of pin 14 in the CAN Low slot.
Close CANcliQ.

Power + Ground
Connections in OBD connector

Ground (KL31) :
OBD Connector pin 4 and pin 5.

Continuous Power (KL30) :
Pin 16 OBD connector.

Warning! CANcliQ or DatacliQ closes only once. Please repower the Squarell Device after the installation is completed. Please connect Squarell devices to a 10V to 30V power supply. Please use certified crimping tools to connect the wires.

Alfa Romeo Mito (typ 955) 2008 +

A B C D E F G H I J K L M N O P Q R S T U V W X Y Z

Copyright © Squarell 2016

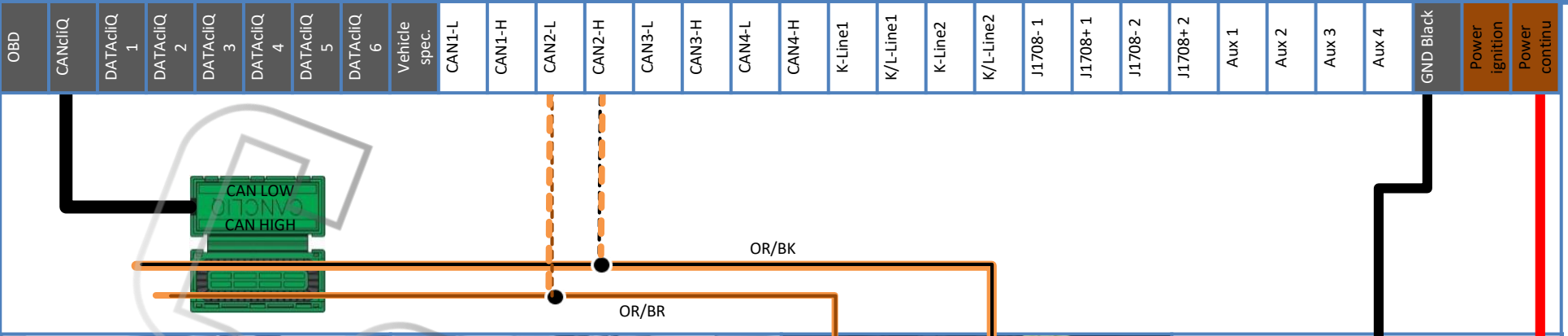

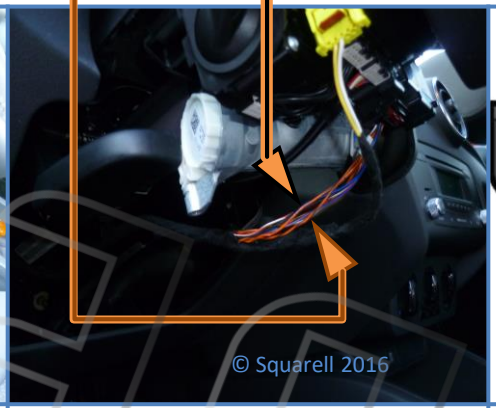

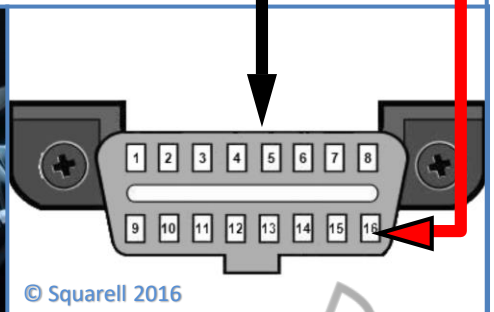

Location

The CANbus wires are located inside the steering column.

Location

Remove the lower steering column cover to find the CAN bus wires.

CANbus

Untwist Orange/Black and Orange/Brown wires:

Place Orange Black wire in the CAN High slot.
Place Orange Brown wire in the CAN Low slot.

Close CANcliQ.

Power + Ground

Underneath the dashboard at drivers side, is the OBD connector located.
Connections at backside of the OBD connector.

Ground (KL31)
Pin 4/5 OBD connector

Continuous Power (KL30)
Pin 16 OBD connector

Warning! CANcliQ or DatacliQ closes only once. Please repower the Squarell Device after the installation is completed. Please connect Squarell devices to a 10V to 30V power supply. Please use certified crimping tools to connect the wires.

Audi A1 (8X) 2010 +

A B C D E F G H I J K L M N O P Q R S T U V W X Y Z

Copyright © Squarell 2014

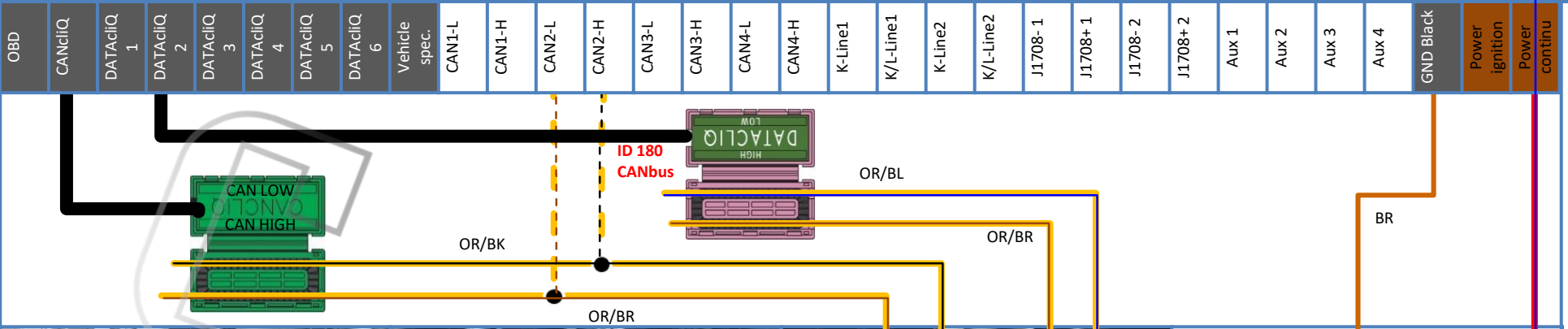

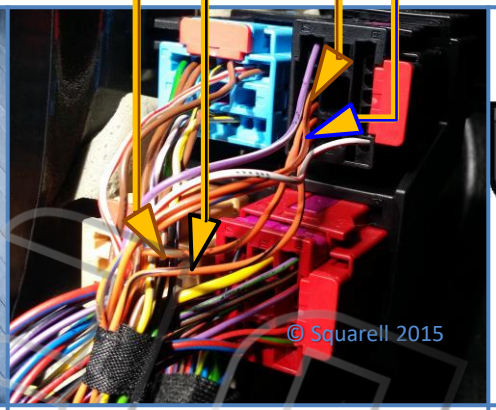

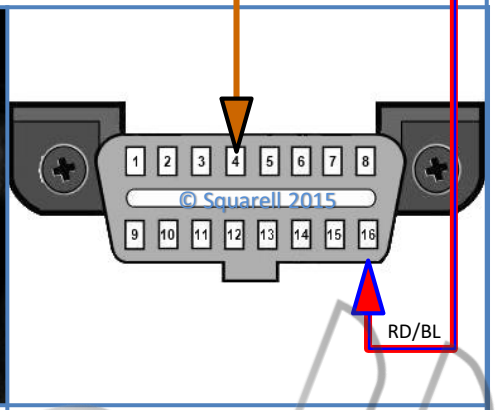

Location

At the driver side, remove the A-Pillar cover.

Location

Find the black connector with 2 twisted pairs of wires.

Primary CANbus: Orange/Black & Orange wires.

Secundairy CANbus: Brown & Orange/Blue & Orange Brown.

Primary CANbus

Untwist Orange/Black & Orange Brown wires.
Place Orange/Black in CAN High slot.
Place Orange/Brown in CAN Low slot.
Close CANcliQ .

Secondary CANbus

Untwist Orange/Blue & Orange/Brown wires.
Place Orange Blue in CAN High slot.
Place Orange Brown in CAN Low slot.
Close DatacliQ (ID180).

Power + Ground

Connections at backside of the OBD Connector.

Ground (KL31) :
OBD Connector pin 4 & 5 (Brown arrow)

Continuous Power (KL30) :
OBD Connector pin 16 (Red/Blue arrow).

Power at ignition (KL15) :
Green/White wire in the wiring loom behind CAN connector (not on this picture).

Warning! CANcliQ or DatacliQ closes only once. Please repower the Squarell Device after the installation is completed. Please connect Squarell devices to a 10V to 30V power supply. Please use certified crimping tools to connect the wires

Audi A3 (typ 8V) 2012 +

A B C D E F G H I J K L M N O P Q R S T U V W X Y Z

Copyright © Squarell 2015

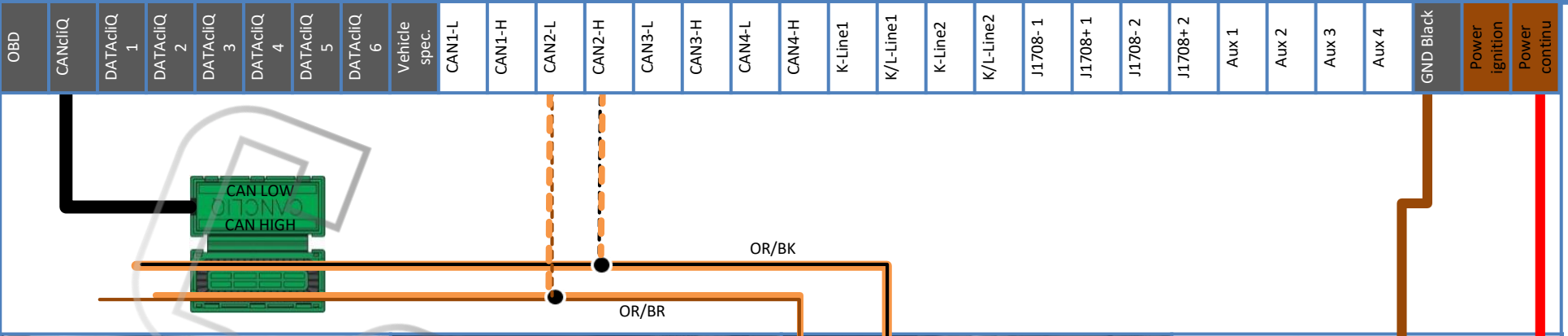

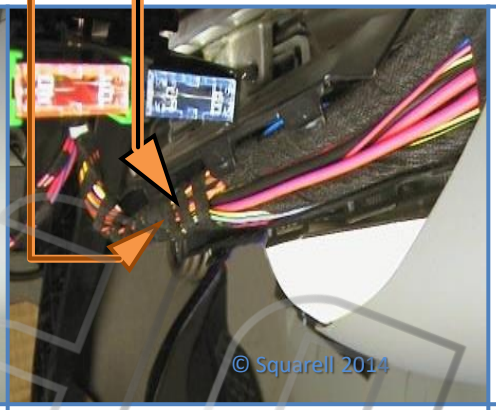

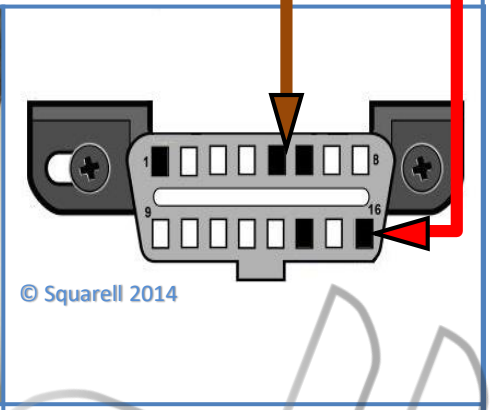

Location

Open up the dashboard by removing the lower dashboard cover.

Remove the black cover to find the wires of the ignition switch.

CANbus

Remove the isolation and untwist Orange/Black and Orange/Brown wires:

Place the Orange/Black wire in the CAN High slot.
Place the Orange/Brown wire in the CAN Low slot.
Close CANcliQ.

Power + Ground

Connections at backside of OBD connector and cigarette lighter.

Ground (KL31)
Pin 4/5 OBD connector (Brown wire)

Continuous Power (KL30)
Pin 16 OBD connector (Red wire)

Power on Ignition (KL15)
At cigarette lighter

Warning! CANcliQ or DatacliQ closes only once. Please repower the Squarell Device after the installation is completed. Please connect Squarell devices to a 10V to 30V power supply. Please use certified crimping tools to connect the wires.

Copyright © Squarell 2014

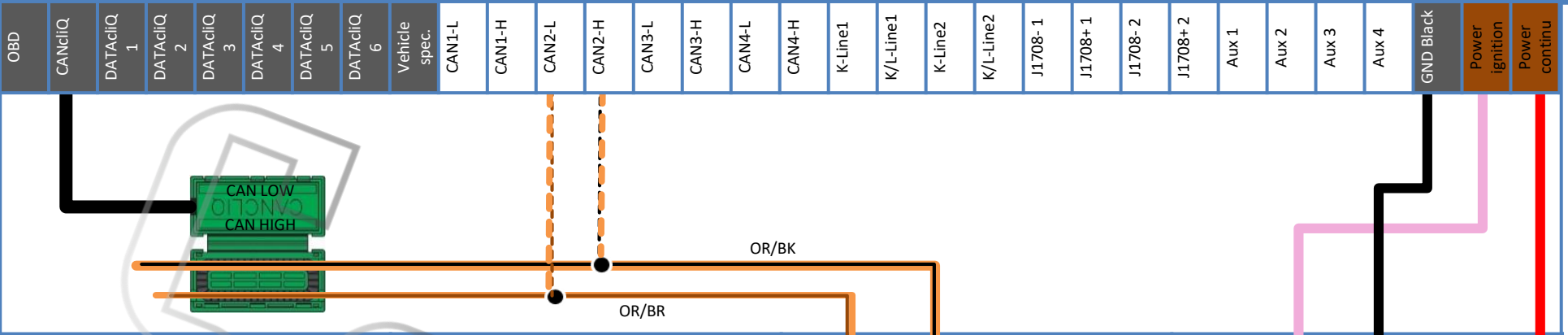

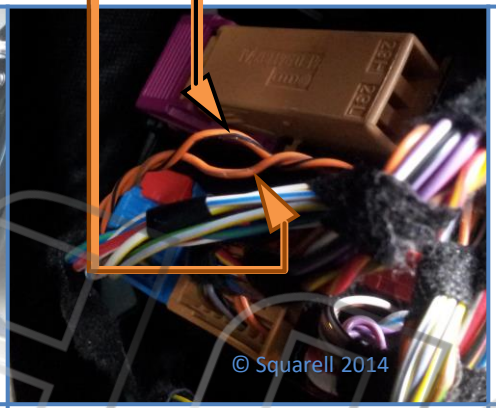

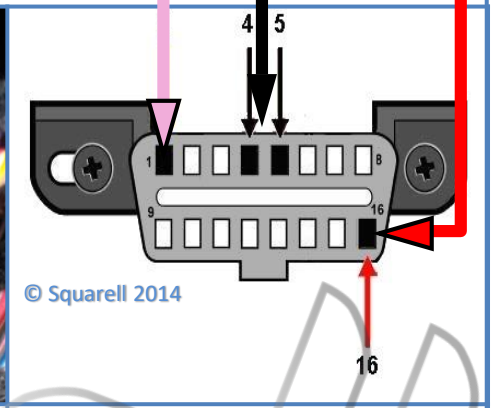

Location

Open up the dashboard by removing the top cover and the side cover at the driver side.

Location

Find the twisted Orange/Black & Orange/Brown wires connectors under the Lower A-pillar cover.

CANbus

Untwist Orange/Black and Orange/Brown wires:

Place Orange Black wire in CAN High slot.
Place Orange Brown wire in CAN Low slot.

Close CANcliQ.

Power + Ground

Connections at the OBD connector.

Ground (KL31)
Pin 4/5 OBD connector

Continuous Power (KL30)
Pin 16 Red wire OBD connector

Power on Ignition (KL15)
Pin 1 Pink wire OBD connector

Warning! CANcliQ or DatacliQ closes only once. Please repower the Squarell Device after the installation is completed. Please connect Squarell devices to a 10V to 30V power supply. Please use certified crimping tools to connect the wires.

Audi A4 (typ B8/8K) 2007 - 2015

A1

Copyright © Squarell 2014

OBD	CANcliQ	DATAcliQ 1	DATAcliQ 2	DATAcliQ 3	DATAcliQ 4	DATAcliQ 5	DATAcliQ 6	Vehicle spec.	CAN1-L	CAN1-H	CAN2-L	CAN2-H	CAN3-L	CAN3-H	CAN4-L	CAN4-H	K-Line1	K/L-Line1	K-Line2	K/L-Line2	J1708- 1	J1708+ 1	J1708- 2	J1708+ 2	Aux 1	Aux 2	Aux 3	Aux 4	GND Black	Power ignition	Power continu

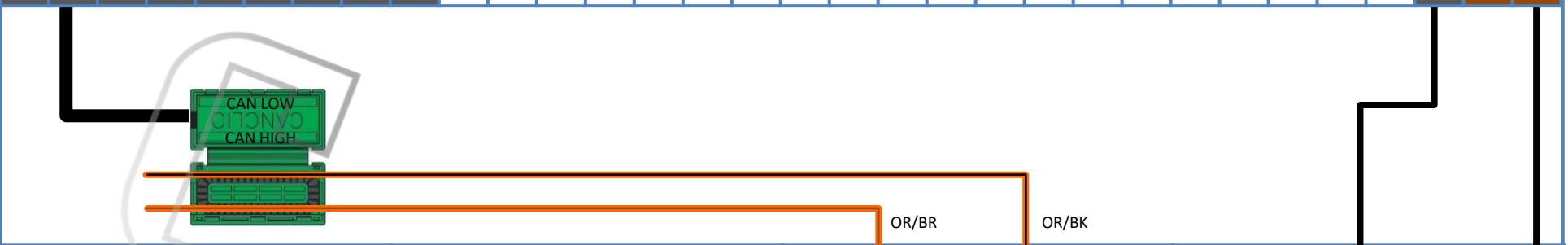

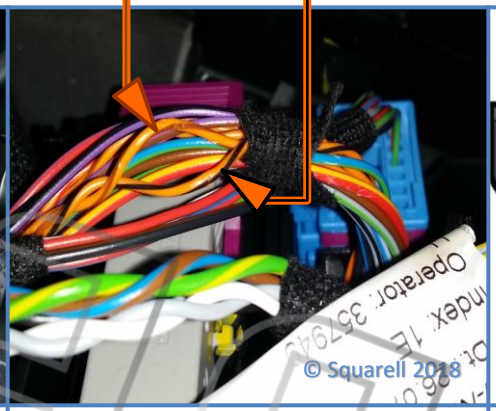

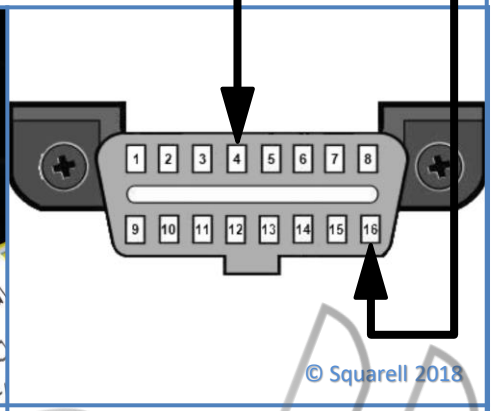

Location

The CANbus is located at the driver driver side. Behind the A-Pillar panel.

Location

Remove the A-Pillar panel to gain access to the wiring loom which contains a twisted pair of Orange/Black & Orange/Brown wires.

CANbus

Untwist Orange/Black and Orange/Brown wires.

Place the Orange/Black wire in the CAN High slot.
Place the Orange/Brown wire in the CAN Low slot.

Close the CANcliQ housing.

Power + Ground

Located at the OBD connector. Underneath the Dashboard at the driver side.

Ground (KL31) :
OBD pin 4 and 5

Continuous Power (KL30) :
OBD pin 16

Warning! CANcliQ closes only once. Please connect Squarell devices to a 10V to 30V power supply. Please use certified crimping tools to connect the wires.

Audi A4 (typ B9/8W) 2016 +

A B C D E F G H I J K L M N O P Q R S T U V W X Y Z

Copyright © Squarell 2015

OBD	CANcliQ	DATAcliQ 1	DATAcliQ 2	DATAcliQ 3	DATAcliQ 4	DATAcliQ 5	DATAcliQ 6	Vehicle spec.	CAN1-L	CAN1-H	CAN2-L	CAN2-H	CAN3-L	CAN3-H	CAN4-L	CAN4-H	K-Line1	K/L-Line1	K-Line2	K/L-Line2	J1708- 1	J1708+ 1	J1708- 2	J1708+ 2	Aux 1	Aux 2	Aux 3	Aux 4	GND Black	Power ignition	Power continu

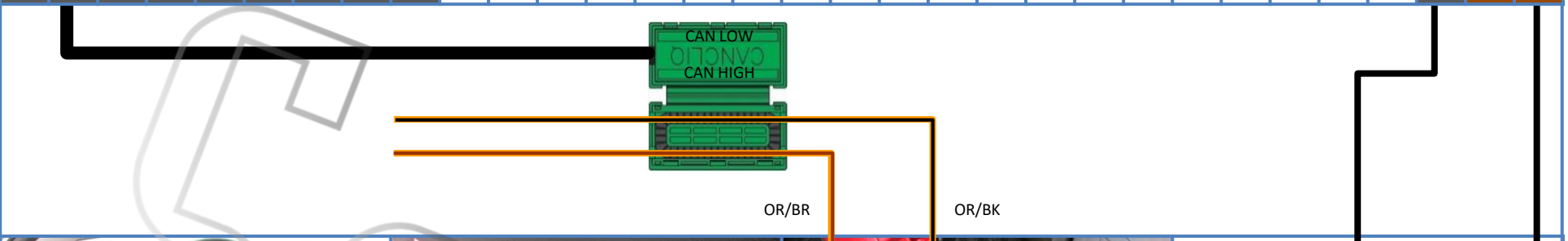

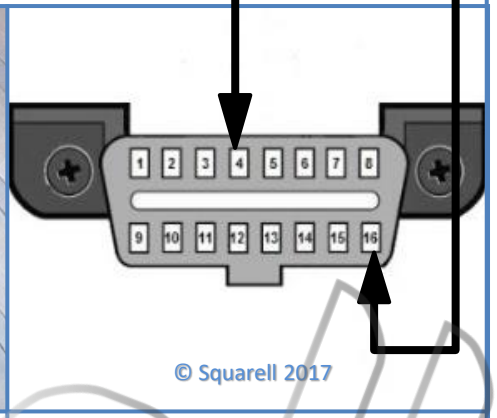

Location

Find the CANbus wires. Located behind the bottom A-pillar cover.

Remove the bottom A-pillar cover. Find the wiring loom shown in the pictures above.

CANbus

Untwist the Orange/Black and Orange/Brown wires.

Place the Orange/Black wire in the CAN High Slot.
Place the Orange/Brown wire in the CAN Low slot.
Close CANcliQ.

Power + Ground
Connections in OBD connector

Ground (KL31) :
OBD connector pin 4 wire and pin 5

Continuous Power (KL30) :
Pin 16 wire OBD connector

Warning! CANcliQ or DatacliQ closes only once. Please repower the Squarell Device after the installation is completed. Please connect Squarell devices to a 10V to 30V power supply. Please use certified crimping tools to connect the wires.

Audi A5 (typ 8T) 2007-2016

A B C D E F G H I J K L M N O P Q R S T U V W X Y Z

Copyright © Squarell 2016

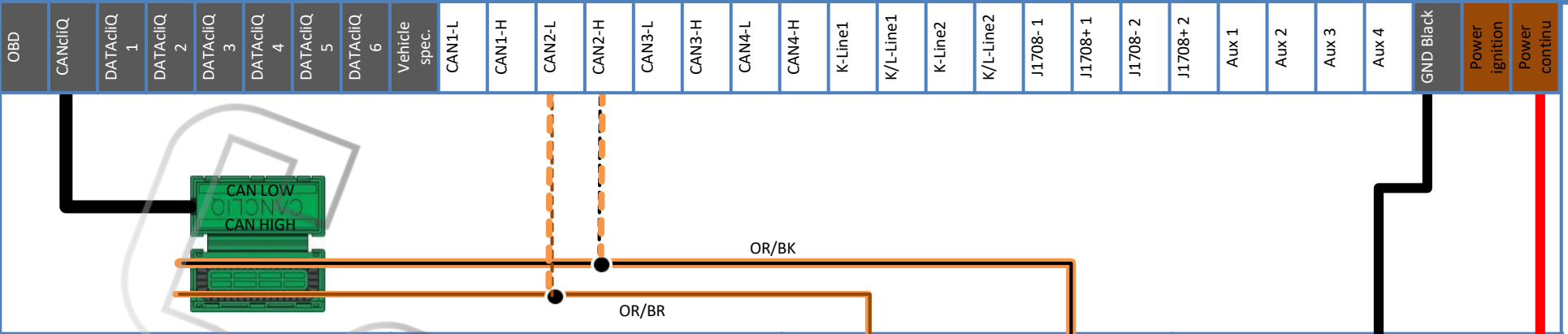

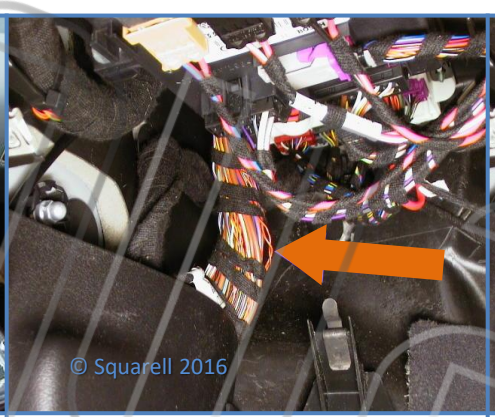

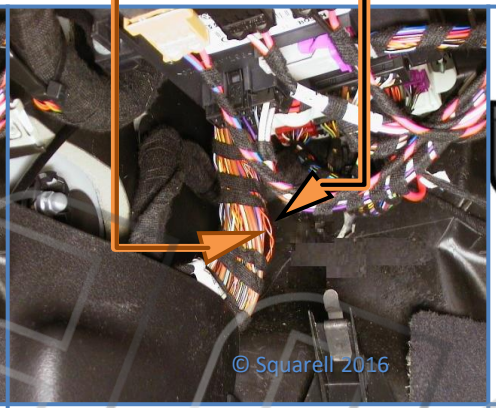

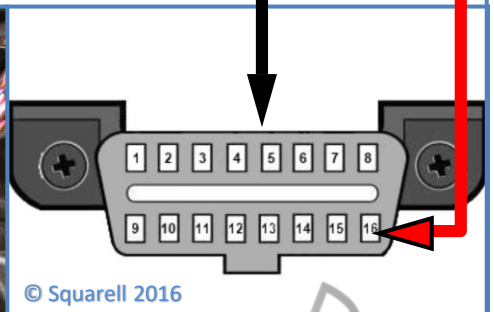

Location

The CANbus wires are located underneath the dashboard.

Location

Remove the lower dashboard covers to find the thick wiring loom.

CANbus

Untwist Orange/Black and Orange/Brown wires:

Place the Orange/Black wire in the CAN High slot.
Place the Orange/Brown wire in the CAN Low slot.

Close CANcliQ.

Power + Ground

Underneath the dashboard at drivers side, is the OBD connector located.
Connections at backside of the OBD connector.

Ground (KL31)
Pin 4/5 OBD connector

Continuous Power (KL30)
Pin 16 OBD connector

Warning! CANcliQ or DatacliQ closes only once. Please repower the Squarell Device after the installation is completed. Please connect Squarell devices to a 10V to 30V power supply. Please use certified crimping tools to connect the wires.

Audi A6 (C6/4F) 2004 - 2011

A B C D E F G H I J K L M N O P Q R S T U V W X Y Z

Copyright © Squarell 2014

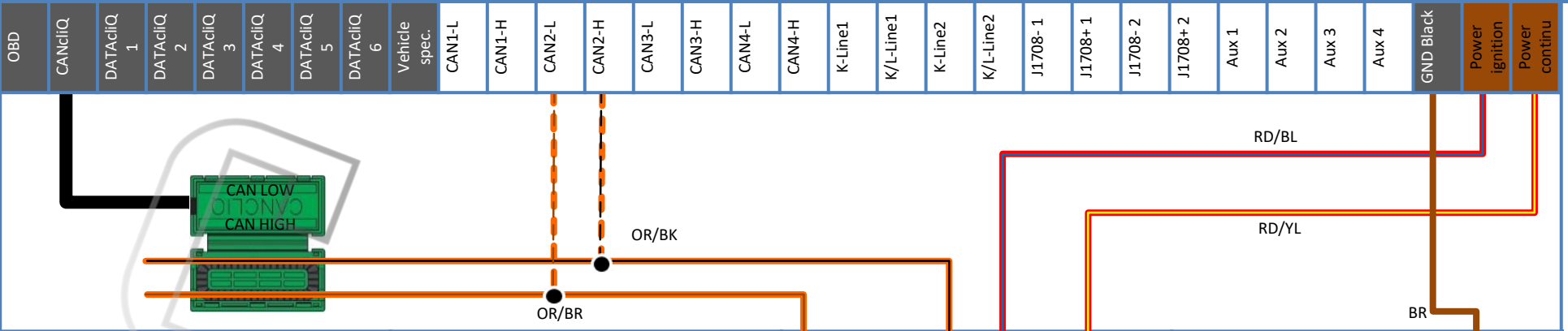

Location

Remove the A-Pillar cover at the driver side.

At the connector Unit you will see the Orange/Black & Orange/Brown twisted pair of wires.

CANbus

Untwist Orange/Black and Orange/Brown wires,
Place the Orange/Black wire in the CAN High
Place the Orange/Brown wire in the CAN Low
Close CANcliQ.

Power + Ground

Connections at the same wiring loom as the CANbus lines.

Ground (KL31) :
Brown wire see the picture (Brown arrow)

Continuous Power (KL30) :
Red/Yellow wire see the picture (Red Yellow arrow)

Power on Ignition (KL15) :
Red/Blue wire see the picture (Red/Blue arrow)

Warning! CANcliQ closes only once. Please connect Squarell devices to a 10V to 30V power supply. Please use certified crimping tools to connect the wires.

Audi A6 (typ C7/4G) 2011 +

A B C D E F G H I J K L M N O P Q R S T U V W X Y Z

Copyright © Squarell 2015

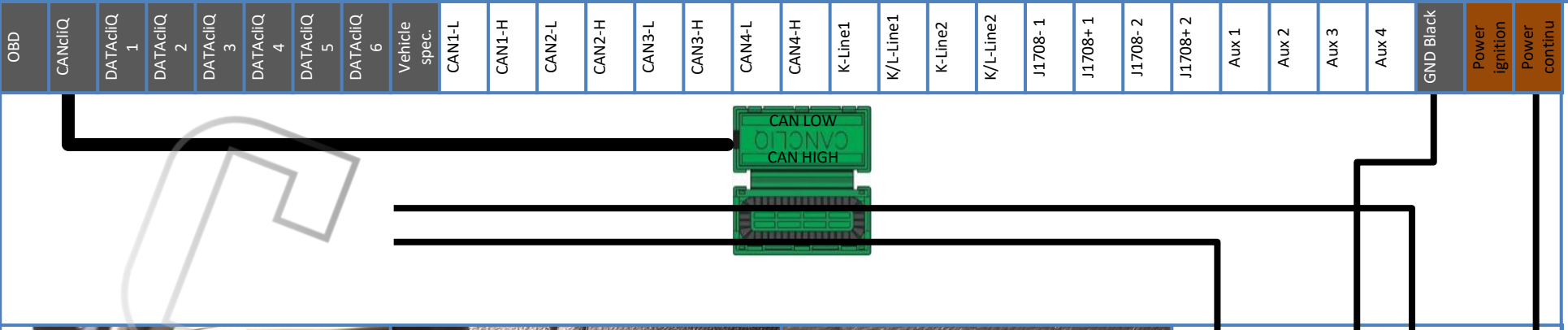

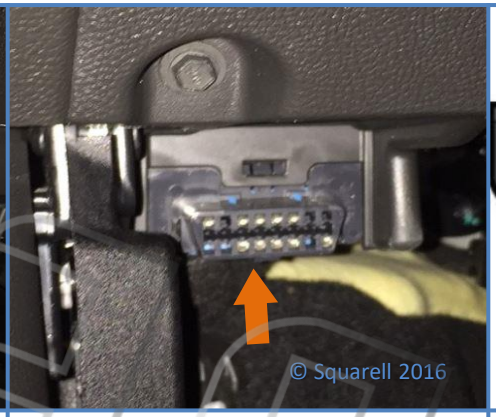

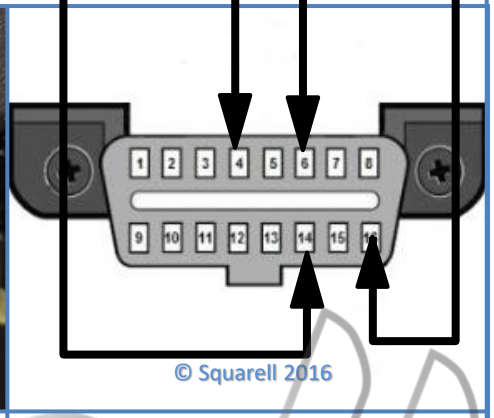

Location

Find the OBD connector at the driver side Located under the dashboard part above the clutch pedal.

Remove the OBD connector from the clip to get access.

CANbus

Untwist the pin 6 and 14 wires.

Place the wire of pin 6 in the CAN High Slot.
Place the wire of pin 14 in the CAN Low slot.
Close CANcliQ.

Power + Ground
Connections in OBD connector

Ground (KL31) :
OBD Connector pin 4 and pin 5.

Continuous Power (KL30) :
Pin 16 OBD connector.

Warning! CANcliQ or DatacliQ closes only once. Please repower the Squarell Device after the installation is completed. Please connect Squarell devices to a 10V to 30V power supply. Please use certified crimping tools to connect the wires.

Buick Encore (1st gen) 2013 +

A B C D E F G H I J K L M N O P Q R S T U V W X Y Z

Copyright © Squarell 2016

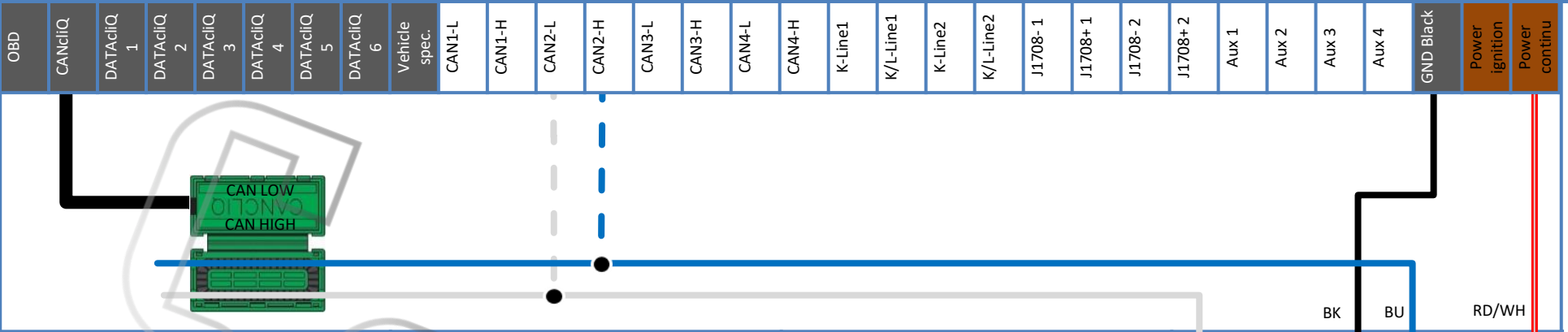

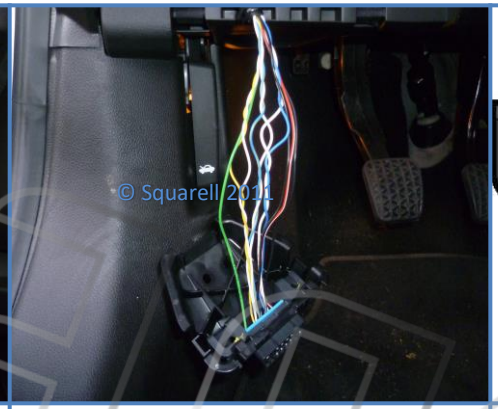

Location

At Driver side,
Remove the Dashboard cap (orange arrow)

Find the OBD Connector and disconnect it (orange arrow)

CANbus

Untwist wires on OBD Connector pin 6 & 14
Place Blue wire in CAN High
Place White Brown wire in CAN Low
Close CANcliQ.

Power + Ground

Connections at backside of the OBD Connector.

Ground (KL31) :
OBD Connector pin 4 & 5 (Black arrow)

Continuous Power (KL30) :
OBD Connector pin 16 (Red/White arrow).

Warning! CANcliQ closes only once. Please connect Squarell devices to a 10V to 48V power supply. Please use certified crimping tools to connect the wires.

Buick Regal (5th gen) 2010 - 2017

A B C D E F G H I J K L M N O P Q R S T U V W X Y Z

Copyright © Squarell 2010

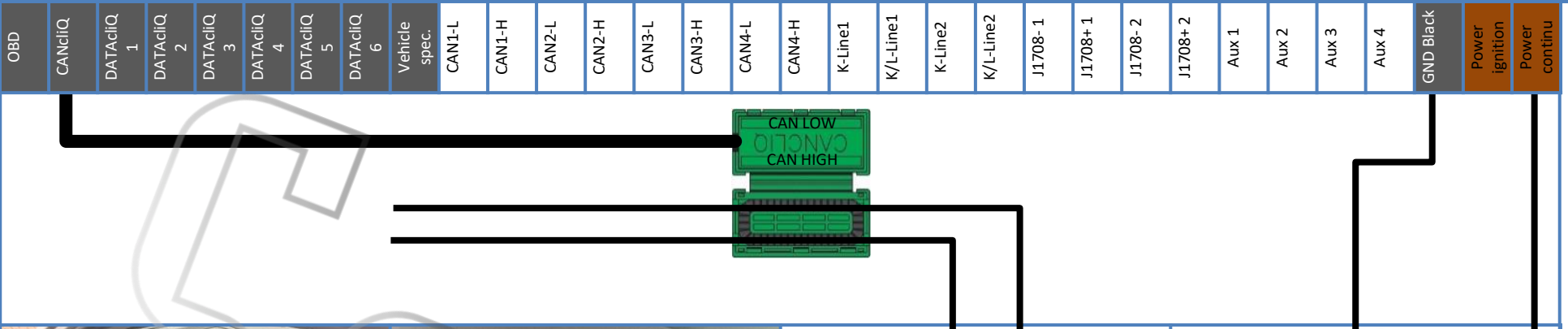

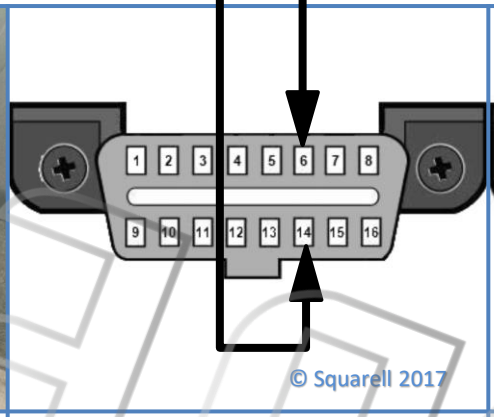

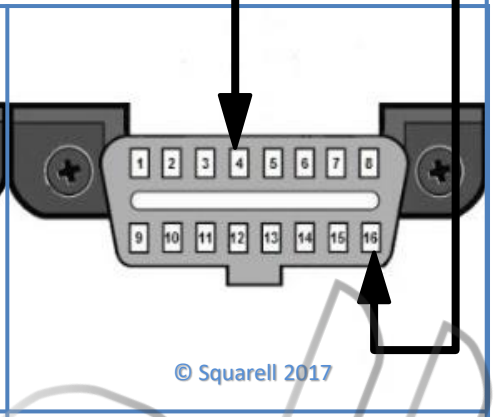

Location

Find the OBD connector at the driver side. Located underneath the dashboard on the left side.

Remove the OBD connector from the clips to get access.

CANbus

Untwist the pin 6 and pin 14 wires.

Place the wire from pin 6 in the CAN High Slot.
Place the wire from pin 14 in the CAN Low slot.
Close CANcliQ.

Power + Ground
Connections in OBD connector

Ground (KL31) :
OBD connector pin 4 wire and pin 5

Continuous Power (KL30) :
Pin 16 wire OBD connector

Warning! CANcliQ or DatacliQ closes only once. Please repower the Squarell Device after the installation is completed. Please connect Squarell devices to a 10V to 30V power supply. Please use certified crimping tools to connect the wires.

Buick Velite 5 2011-2015

A B C D E F G H I J K L M N O P Q R S T U V W X Y Z

Copyright © Squarell 2016

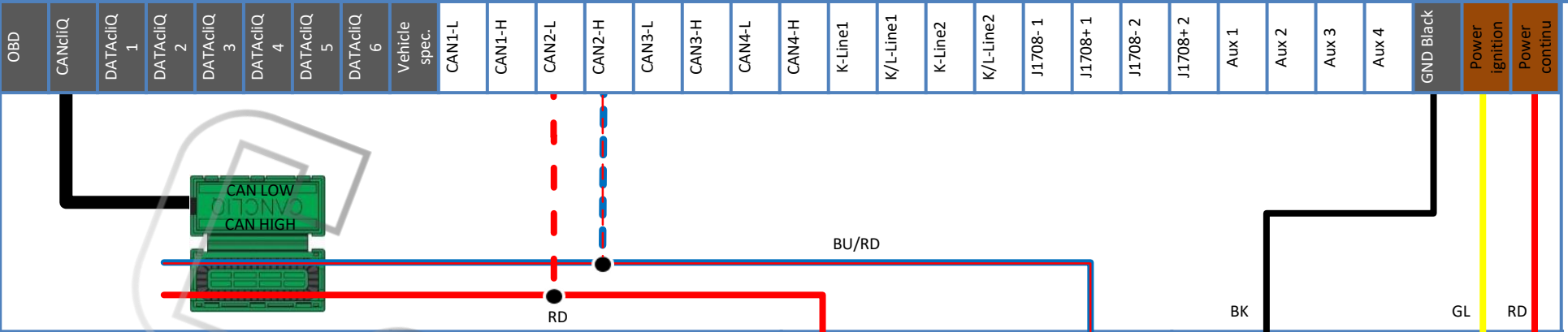

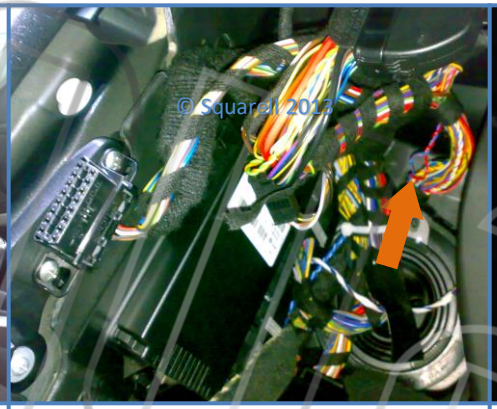

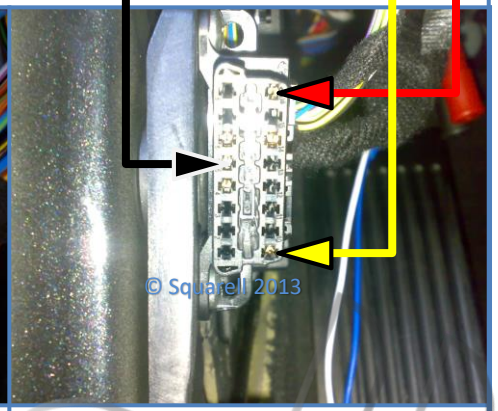

Location

At Driver side, under the dashboard
Remove 2 screws of the lowest plate.
Open the dashboard cap.
Disconnect the OBD connector, the footlight and the speaker.
Remove the lowest dashboard plate.

Find the Red and Blue/Red twisted wires. (orange arrow).

CANbus

Untwist the wires .
Place BMW Blue/Red wire in CAN High.
Place BMW Red wire in CAN Low.
Close CANcliQ.

It's possible that there are multiple Red & Blue/Red twisted wires available. To identify the correct wires, please measure the Voltage: Blue/Red about 2,6V & Red about 2,4V (when the ignition is on).

Power + Ground

Connections at the OBD connector.

Ground (KL31) :
OBD Connector pin 4 and pin 5 (Black arrow).

Continuous Power (KL30) :
OBD Connector pin 16 (Red arrow).

Power on Ignition (KL15) :
Green/Blue wire (Yellow arrow).

Warning! CANcliQ closes only once. Please connect Squarell devices to a 10V to 48V power supply. Please use certified crimping tools to connect the wires.

BMW 1-Series (E81,E82,E87,E88) 2007 - 2013

A B C D E F G H I J K L M N O P Q R S T U V W X Y Z

Copyright © Squarell2013

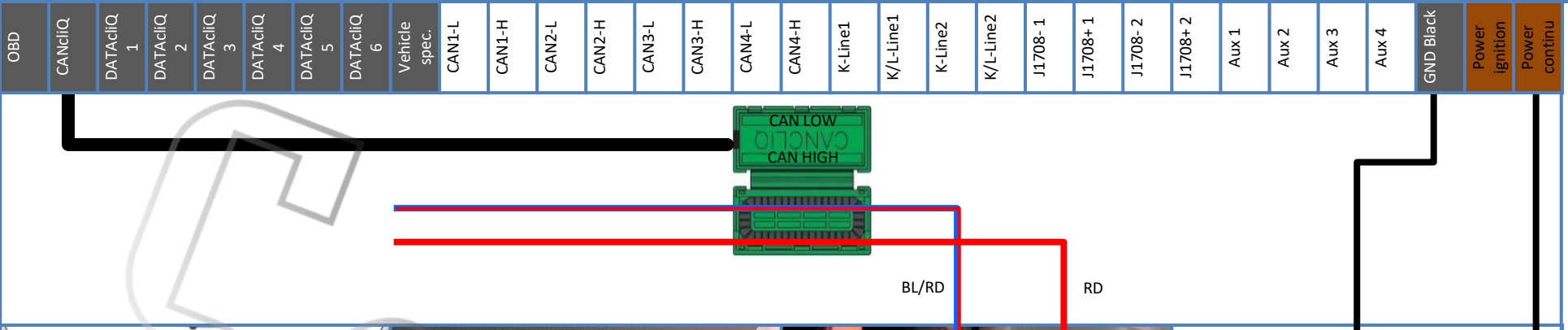

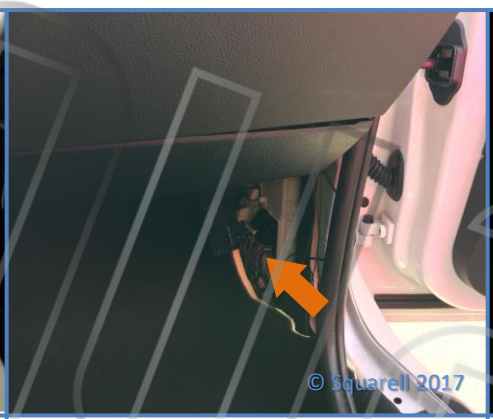

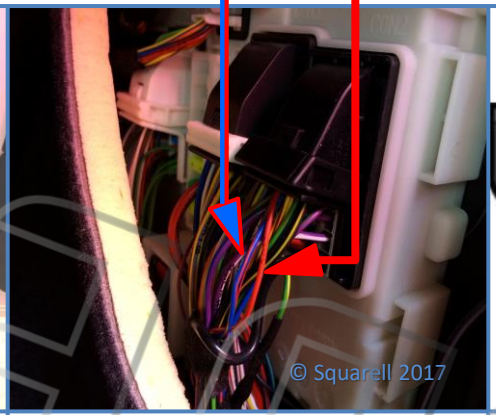

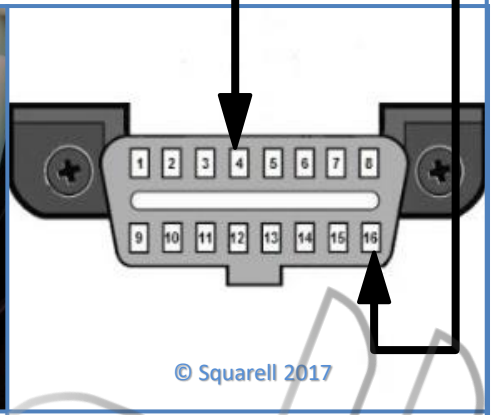

Location

Find the ECU at the passenger side. Located behind the A-pillar cover.

Remove the A-pillar cover to get access.

CANbus

Untwist the Blue/Red and Red wires.

Place the Blue/Red wire in the CAN High Slot.
Place the Red wire in the CAN Low slot.
Close CANcliQ.

Power + Ground
Connections in OBD connector

Ground (KL31) :
OBD connector pin 4 wire and pin 5

Continuous Power (KL30) :
Pin 16 wire OBD connector

Warning! CANcliQ or DatacliQ closes only once. Please repower the Squarell Device after the installation is completed. Please connect Squarell devices to a 10V to 30V power supply. Please use certified crimping tools to connect the wires.

BMW 1-Series (F20,F21) 2011+

A B C D E F G H I J K L M N O P Q R S T U V W X Y Z

Copyright © Squarell 2016

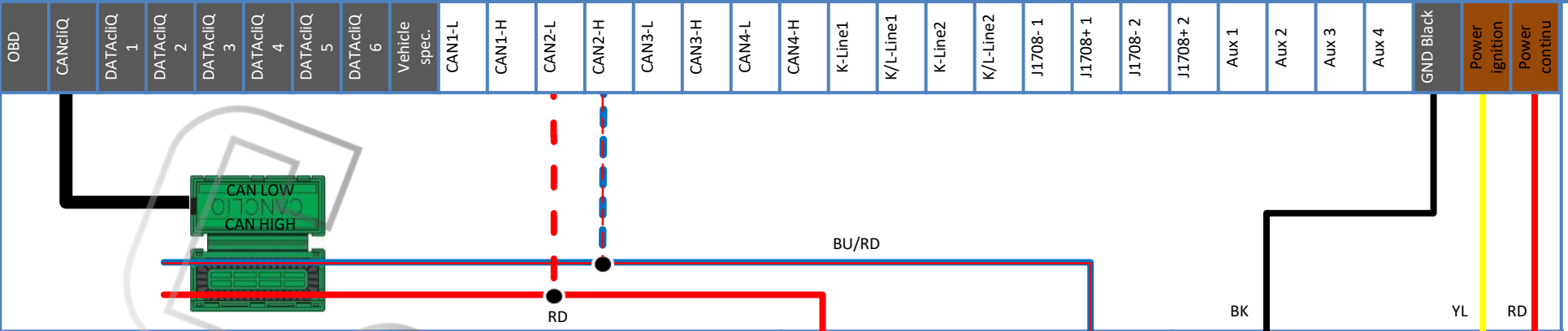

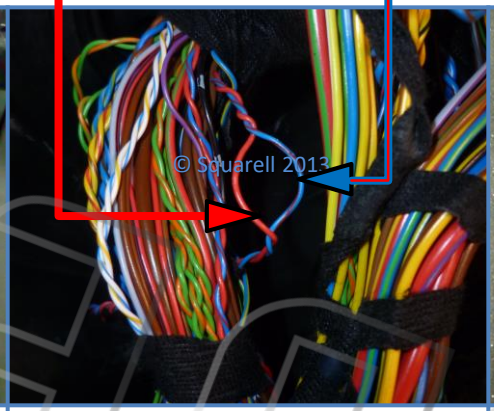

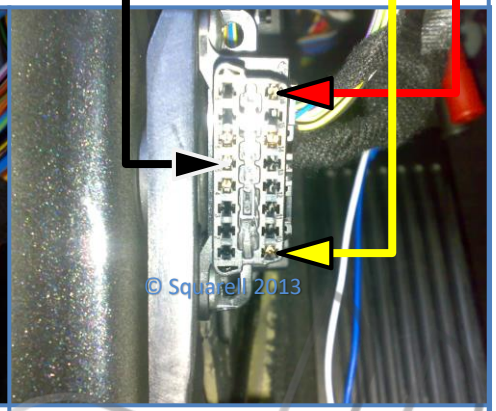

Location

At Driver side, under the dashboard
Remove 2 screws of the lowest plate.
Open the dashboard cap.
Disconnect the OBD connector, the footlight and the speaker.
Remove the lowest dashboard plate.

Find the Red and Blue/Red twisted wires. (orange arrow).

CANbus

Untwist the wires .
Place BMW Blue/Red wire in CAN High.
Place BMW Red wire in CAN Low.
Close CANcliQ.

It's possible that there are multiple Red & Blue/Red twisted wires available. To identify the correct wires, please measure the Voltage: Blue/Red about 2,6V & Red about 2,4V (when the ignition is on).

Power + Ground

Connections at the OBD connector.

Ground (KL31) :
OBD Connector pin 4 and pin 5 (Black arrow).

Continuous Power (KL30) :
OBD Connector pin 16 (Red arrow).

Power on Ignition (KL15) :
OBD connector pin 1 Green/Blue wire (Yellow arrow).

Warning! CANcliQ closes only once. Please connect Squarell devices to a 10V to 48V power supply. Please use certified crimping tools to connect the wires.

BMW 3-Series (E90-E93) 2007 - 2012

A B C D E F G H I J K L M N O P Q R S T U V W X Y Z

Copyright © Squarell2013

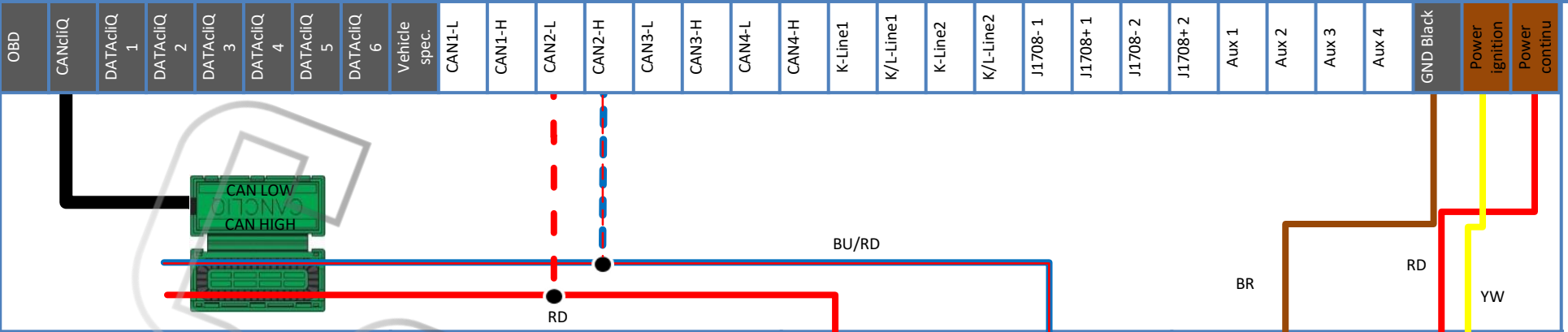

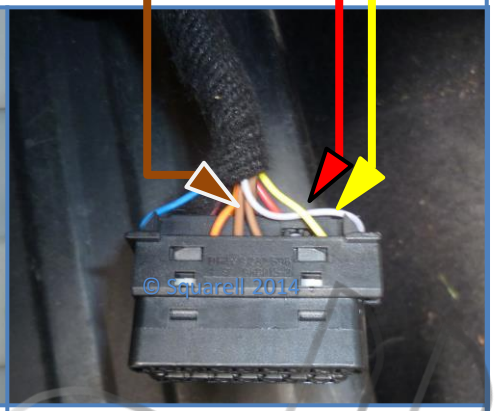

Location

Remove A-style cover at passenger side.

Location CANbus

At the passenger side is the electronic module located.

CANbus

Untwist the Red and Blue/Red wires .
Place BMW Blue/Red wire in CAN High.
Place BMW Red wire in CAN Low.
Close CANcliQ.

Power + Ground

Connections at the OBD connector.

Ground (KL31) :
OBD Connector pin 4 Brown wire and pin 5 (Brown arrow).

Continuous Power (KL30) :
OBD Connector pin 16 Yellow wire (Red arrow).

Power on Ignition (KL15) :
OBD connector pin 1 White wire (Yellow arrow).

Warning! CANcliQ closes only once. Please connect Squarell devices to a 10V to 48V power supply. Please use certified crimping tools to connect the wires.

BMW 3-Series (F30,F31,F34) 2012 +

A B C D E F G H I J K L M N O P Q R S T U V W X Y Z

Copyright © Squarell 2014

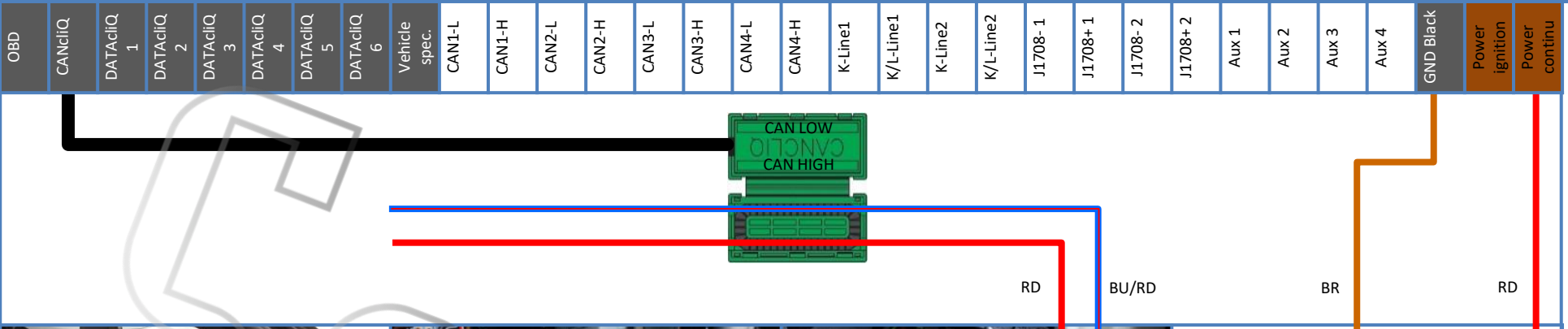

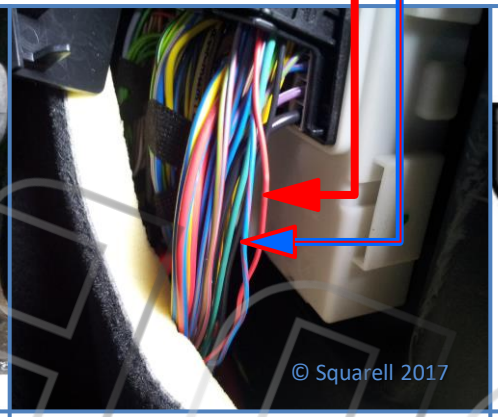

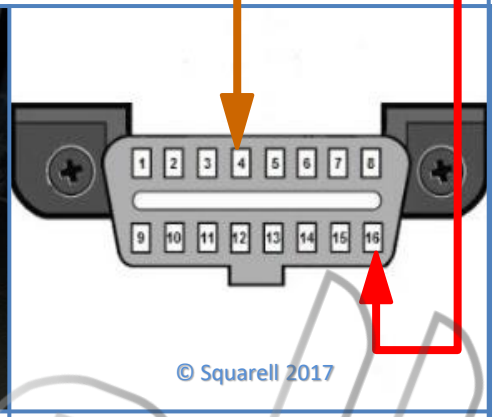

Location

The CANbus can be found behind the A-style cover on the passengers side.

Location CANbus

Remove A-style cover at passenger side to gain access to the FEM module. The Black connector in the FEM module contains the twisted pair.

CANbus

Untwist the Blue/Red and Red wires.

Place the Blue/Red wire in the CAN High Slot.
Place the Red wire in the CAN Low slot.
Close the CANcliQ.

Power + Ground
Connections in OBD connector

Ground (KL31) :
The brown wires connected to pin 4 and 5 is the ground.

Continuous Power (KL30) :
The Red wire connected to pin 16 is the continuous power.

Warning! CANcliQ or DatacliQ closes only once. Please repower the Squarell Device after the installation is completed. Please connect Squarell devices to a 10V to 30V power supply. Please use certified crimping tools to connect the wires.

BMW 4-Series (F32,F33,F36) 2014+

A B C D E F G H I J K L M N O P Q R S T U V W X Y Z

Copyright © Squarell 2016

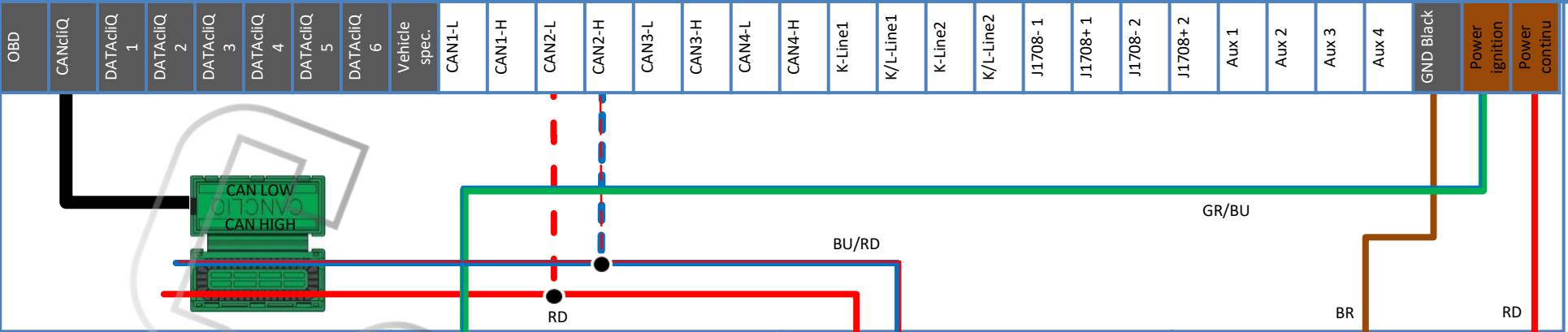

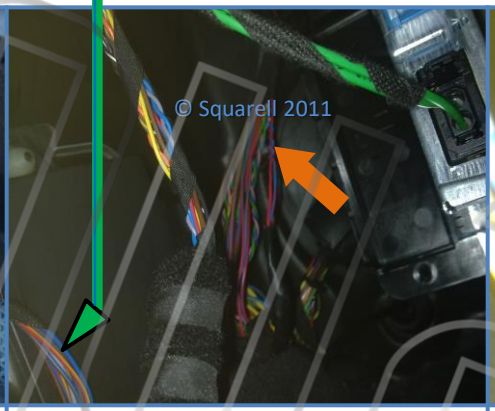

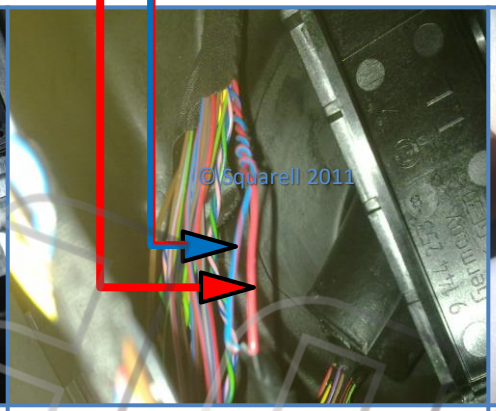

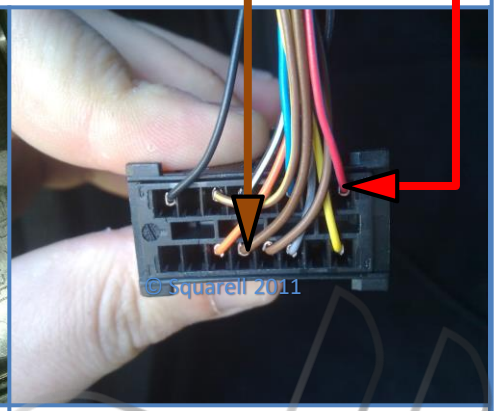

Location

At Driver side, under the Dashboard
Remove 2 screws of the lowest plate
Open the Dashboard cap
Disconnect the OBD connector, the footlight and the speaker
Remove the Lowest dashboard plate

Find the Red & Blue/Red twisted wires. (orange arrow)

CANbus

Untwist the wires
Place BMW Blue/Red wire in CAN High
Place BMW Red wire in CAN Low
Close CANcliQ.

Power + Ground

Connections at backside of OBD Connector.

Ground (KL31) :
OBD Connector pin 4 and pin 5 (Brown arrow).

Continuous Power (KL30) :
OBD Connector pin 16 (Red arrow).

Power on Ignition (KL15) :
Green/Blue wire (Green/Blue arrow).

Warning! CANcliQ closes only once. Please connect Squarell devices to a 10V to 48V power supply. Please use certified crimping tools to connect the wires.

BMW 5-Series (F10,F11) 2010 - 2016

A B C D E F G H I J K L M N O P Q R S T U V W X Y Z

Copyright © Squarell 2010

OBD	CANcliQ	DATAcliQ 1	DATAcliQ 2	DATAcliQ 3	DATAcliQ 4	DATAcliQ 5	DATAcliQ 6	Vehicle spec.	CAN1-L	CAN1-H	CAN2-L	CAN2-H	CAN3-L	CAN3-H	CAN4-L	CAN4-H	K-Line1	K/L-Line1	K-Line2	K/L-Line2	J1708- 1	J1708+ 1	J1708- 2	J1708+ 2	Aux 1	Aux 2	Aux 3	Aux 4	GND Black	Power ignition	Power continu

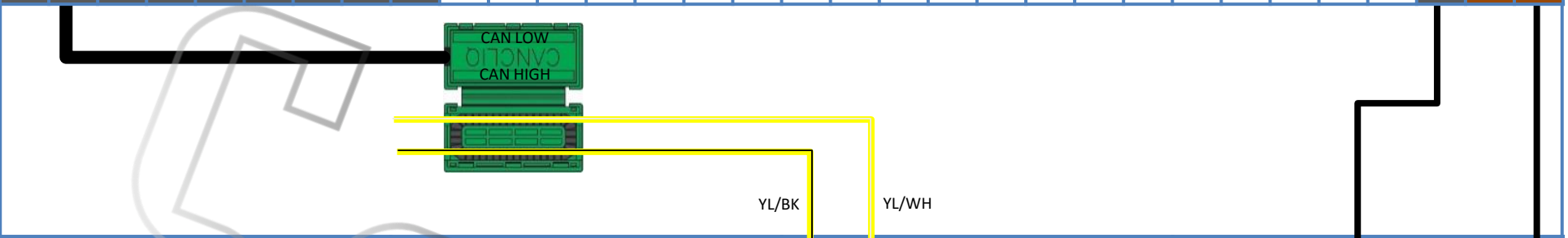

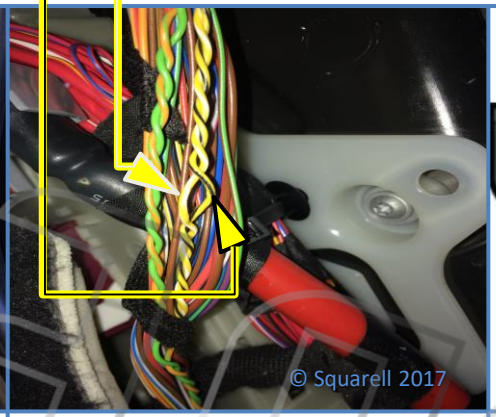

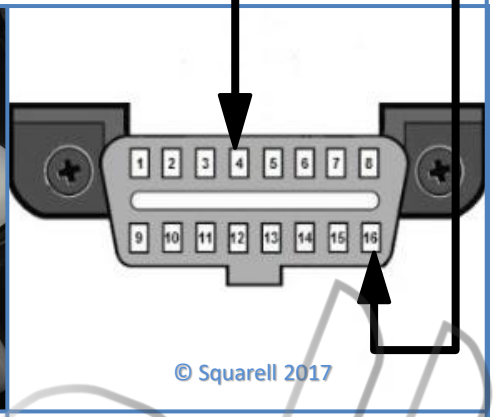

Location

The CANbus is located at the passenger side. Behind the A-Pillar panel. The ZGM/BDC Module contains a Yellow/White & Yellow/Black CANbus. (Orange Arrow)

The OBD connector is located at the Driver side, underneath the dashboard. (Yellow Arrow)

Remove the A-Pillar panel to gain access to the ZGM/BDC Module.
Find the twisted pair of Yellow/White &Yellow/Black wires.

CANbus

Untwist the Yellow/White and Yellow/Black wires.

Place the Yellow/White wire in the CAN High Slot.

Place the Yellow/Black wire in the CAN Low slot.

Close the CANcliQ housing.

Power + Ground
Connections in OBD connector

Ground (KL31) :
OBD connector pin 4 and 5

Continuous Power (KL30) :
OBD connector pin 16

Warning! CANcliQ or DatacliQ closes only once. Please repower the Squarell Device after the installation is completed. Please connect Squarell devices to a 10V to 30V power supply. Please use certified crimping tools to connect the wires.

BMW 5-Series (G30, G31) 2017+

A B C D E F G H I J K L M N O P Q R S T U V W X Y Z

Copyright © Squarell 2016

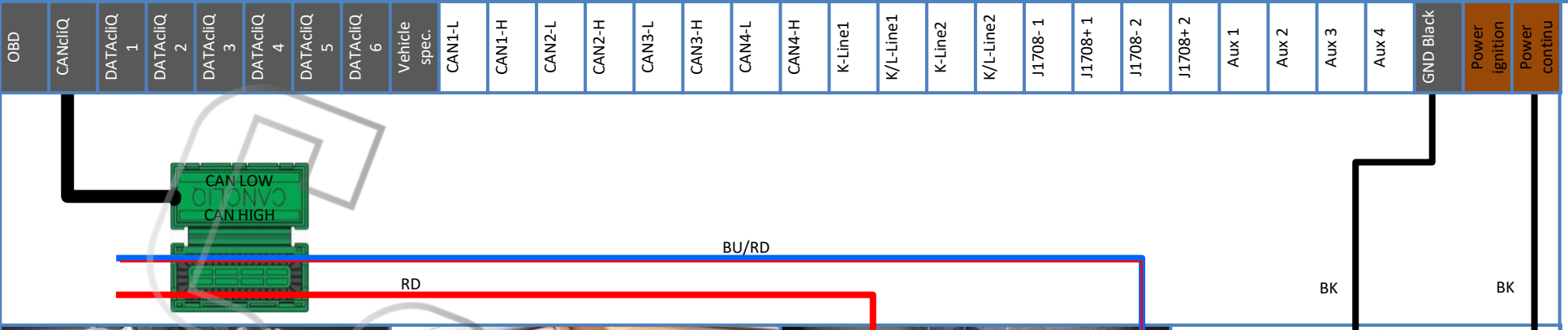

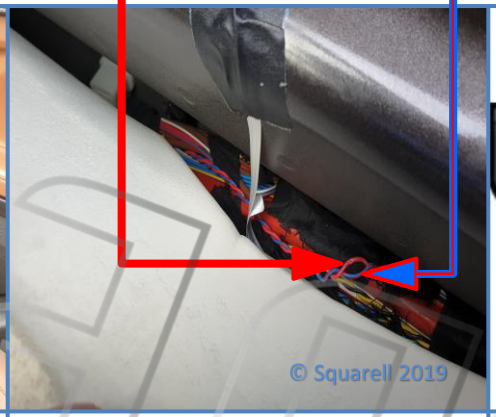

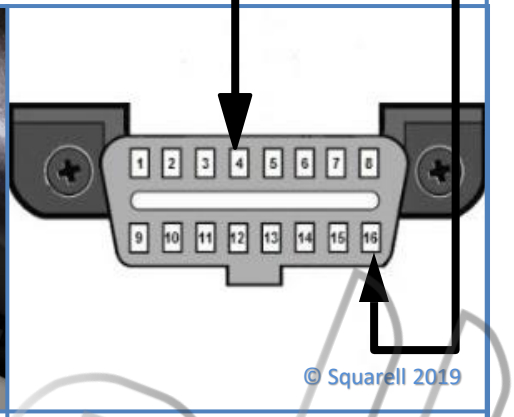

Location

The CANbus can be found at the passenger side.

Location

To get to the CANbus, the sill cover needs to be removed.

Connection:

Untwist the Blue/Red and Red wires.

Place the Blue/Red wire in the CAN High Slot.

Place the Red wire in the CAN Low slot.

Close CANcliQ.

Power + Ground
Connections in OBD connector

Ground (KL31) :
OBD connector pin 4 wire and pin 5

Continuous Power (KL30) :
Pin 16 wire OBD connector

Warning! CANcliQ or DatacliQ closes only once. Please repower the Squarell Device after the installation is completed. Please connect Squarell devices to a 10V to 30V power supply. Please use certified crimping tools to connect the wires.

BMW 6-Series (F06/F12/F13) 2011-2018

A B C D E F G H I J K L M N O P Q R S T U V W X Y Z

Copyright © Squarell 2019

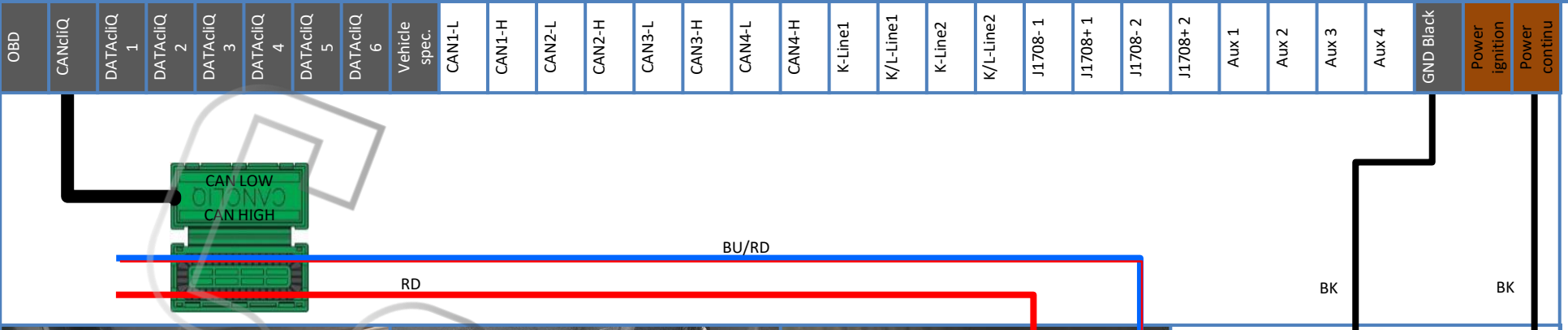

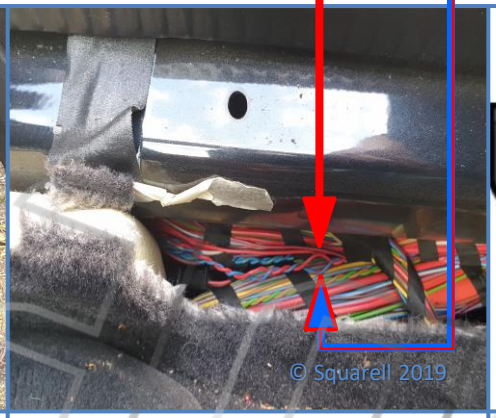

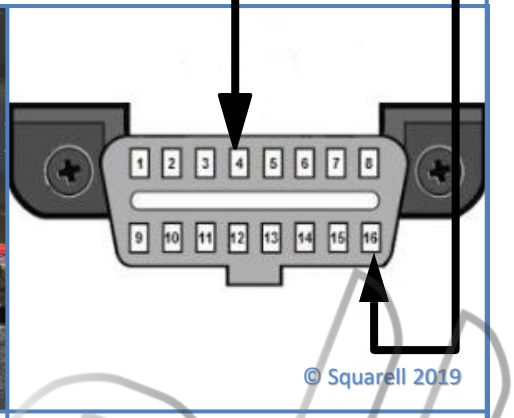

Location

The CANbus can be found at the passenger side.

First remove the small panel on the sill to gain access to the screws.

Location

To get to the CANbus, the sill cover needs to be removed.

Connection:

Untwist the Blue/Red and Red wires.

Place the Blue/Red wire in the CAN High Slot.

Place the Red wire in the CAN Low slot.

Close CANcliQ.

Power + Ground
Connections in OBD connector

Ground (KL31) :
OBD connector pin 4 wire and pin 5

Continuous Power (KL30) :
Pin 16 wire OBD connector

Warning! CANcliQ or DatacliQ closes only once. Please repower the Squarell Device after the installation is completed. Please connect Squarell devices to a 10V to 30V power supply. Please use certified crimping tools to connect the wires.

BMW 7-Series (F01/F02/F03/F04) 2008-2015

A B C D E F G H I J K L M N O P Q R S T U V W X Y Z

Copyright © Squarell 2019

OBD	CANcliQ	DATAcliQ 1	DATAcliQ 2	DATAcliQ 3	DATAcliQ 4	DATAcliQ 5	DATAcliQ 6	Vehicle spec.	CAN1-L	CAN1-H	CAN2-L	CAN2-H	CAN3-L	CAN3-H	CAN4-L	CAN4-H	K-Line1	K/L-Line1	K-Line2	K/L-Line2	J1708- 1	J1708+ 1	J1708- 2	J1708+ 2	Aux 1	Aux 2	Aux 3	Aux 4	GND Black	Power ignition	Power continu

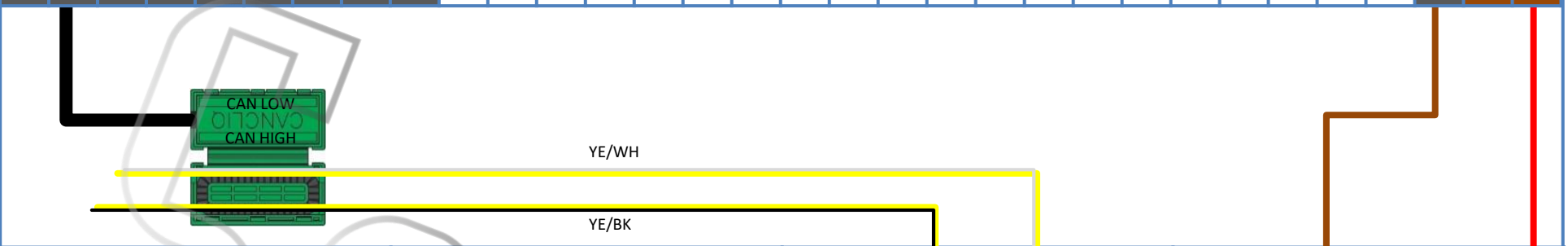

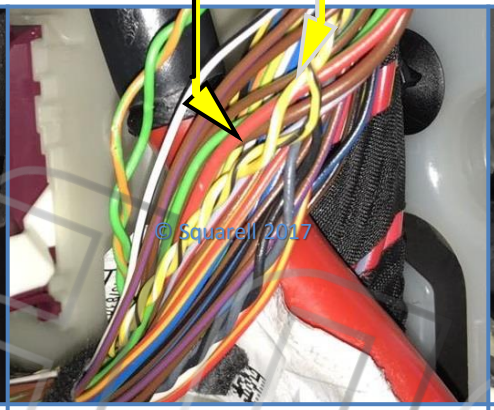

Location

Canbus located at Control module under the A-Pillar cover.

When you remove the upholstery the Control Module can be reached with the twisted CAN wires.

CANbus

Untwist the Yellow/White & Yellow/Black wire

Place the Yellow/White wire in the CAN high slot.
Place the Yellow/Black wire in CAN Low slot.
Close CANcliQ.

Power & Ground at same location as CANbus

Ground (KL31) :
Brown Wires (Brown arrow).

Continuous Power (KL30) :
Red wires (Red arrow).

Warning! CANcliQ or DatacliQ closes only once. Please repower the Squarell Device after the installation is completed. Please connect Squarell devices to a 10V to 30V power supply. Please use certified crimping tools to connect the wires.

BMW 7-serie (G11,G12) 2016 +

A B C D E F G H I J K L M N O P Q R S T U V W X Y Z

Copyright © Squarell 2017

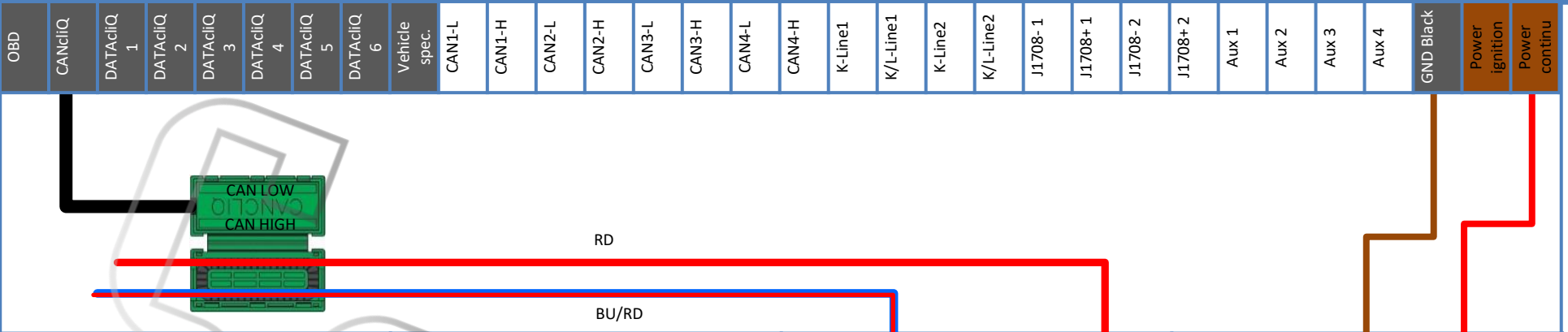

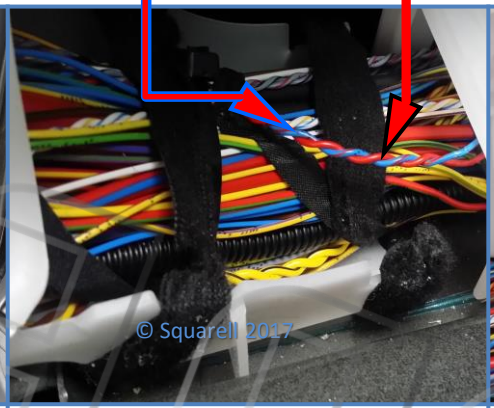

Location

Canbus located under sill cover at the passenger side.

Open up the side cover by lifting the upholstery and plastic covers.

CANbus

Untwist the Red & Blue/Red wire

Place the Red wire in the CAN high slot.
Place the Blue/Red wire in CAN Low slot.
Close CANcliQ.

Power & Ground at same location as CANbus

Ground (KL31) :
Brown Wires (Brown arrow).

Continuous Power (KL30) :
Red wires (Red arrow).

Warning! CANcliQ or DatacliQ closes only once. Please repower the Squarell Device after the installation is completed. Please connect Squarell devices to a 10V to 30V power supply. Please use certified crimping tools to connect the wires.

BMW X5 (F15) 2013 +

A B C D E F G H I J K L M N O P Q R S T U V W X Y Z

Copyright © Squarell 2017

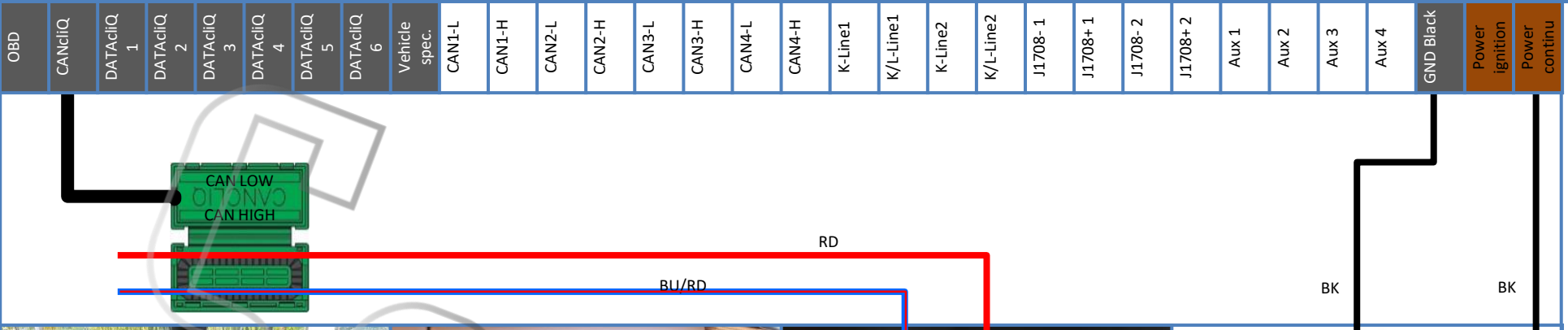

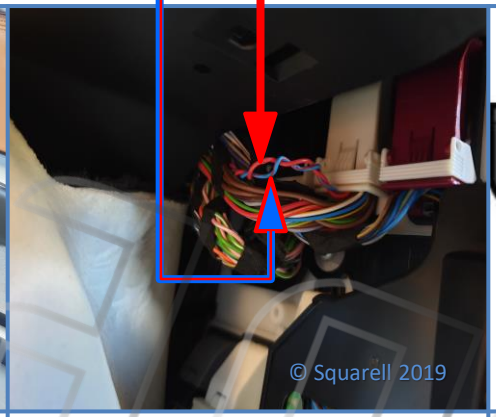

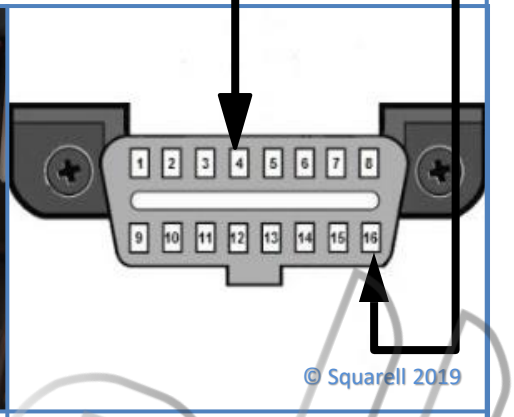

Location

The CANbus can be found at the passenger side.

Location

To get to the CANbus, the A-style cover needs to be removed.

Connection:

Untwist the Red & Blue/Red wires.

Place the Red wire in the CAN High Slot.

Place the Blue/Red wire in the CAN Low slot.

Close CANcliQ.

Power + Ground
Connections in OBD connector

Ground (KL31) :
OBD connector pin 4 wire and pin 5

Continuous Power (KL30) :
Pin 16 wire OBD connector

Warning! CANcliQ or DatacliQ closes only once. Please repower the Squarell Device after the installation is completed. Please connect Squarell devices to a 10V to 30V power supply. Please use certified crimping tools to connect the wires.

BMW X6 (F16) 2014-2018

A B C D E F G H I J K L M N O P Q R S T U V W X Y Z

Copyright © Squarell 2019

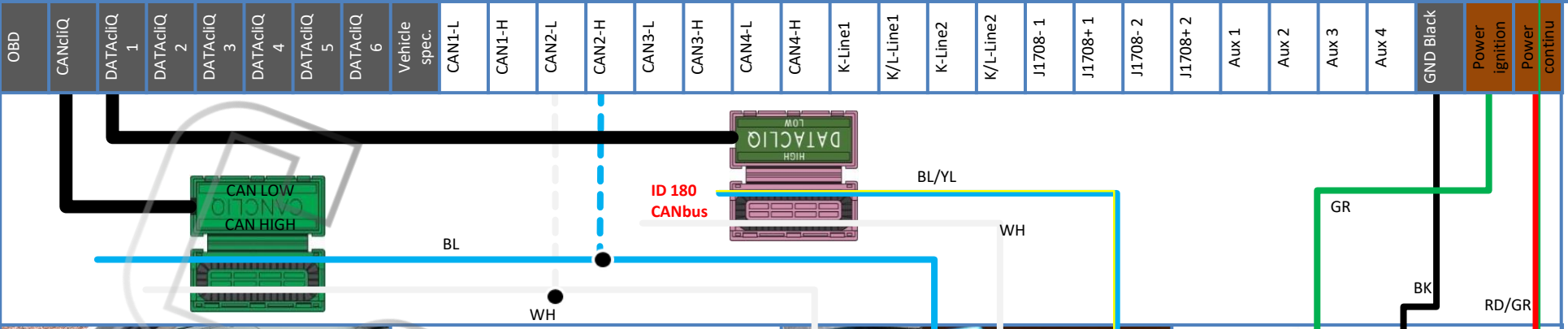

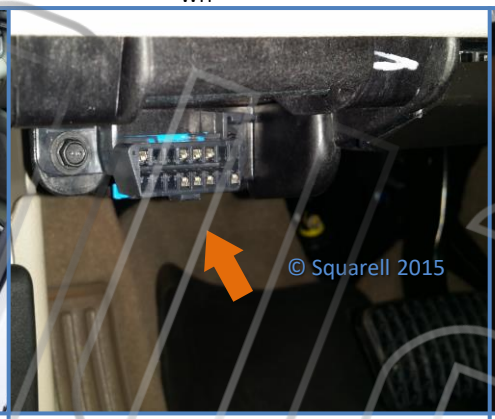

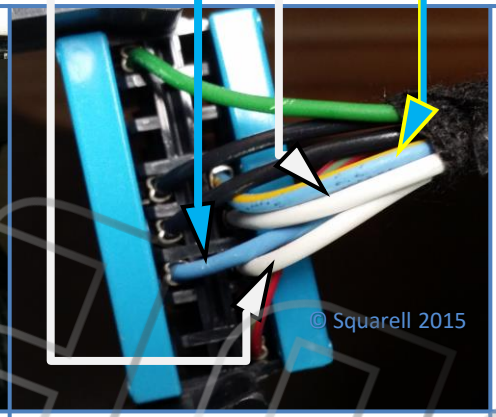

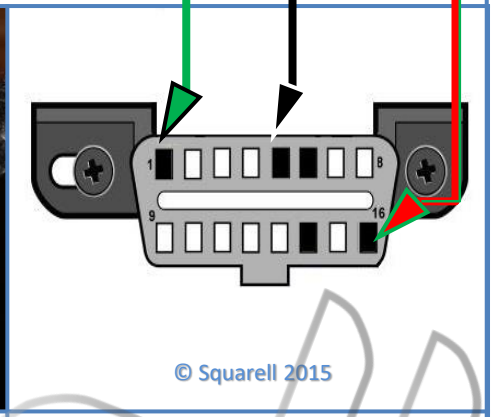

Location

Find the OBD connector at the driver side under the dashboard..

Location

Remove the OBD connector from the socket with the 2 bolts, to get good access to the required wires.

Primary CANbus

Untwist Blue and White wires (Pin 6 & 14) of the OBD connector.
Place Blue Wire in CAN High slot and place the White wire in the CAN low slot and close the CANcliQ.

Secondary CANbus
Untwist Blue/Yellow and White wire (Pin 12 & 13).
Place Blue/Yellow wire in CAN High slot.
Place White wire in CAN Low slot.
Close DatacliQ (ID180).

Power + Ground
Connections in OBD connector

Ground (KL31) :
Ground at Pin 5 OBD connector (Black arrow).

Continuous Power (KL30) :
Pin 16 OBD connector (Red/Green arrow).

Power on Ignition (KL15) :
Pin 1 OBD connector (Green arrow).

Warning! CANcliQ or DatacliQ closes only once. Please repower the Squarell Device after the installation is completed. Please connect Squarell devices to a 10V to 30V power supply. Please use certified crimping tools to connect the wires.

Cadillac XTS (1st gen) 2012 +

A B C D E F G H I J K L M N O P Q R S T U V W X Y Z

Copyright © Squarell 2015

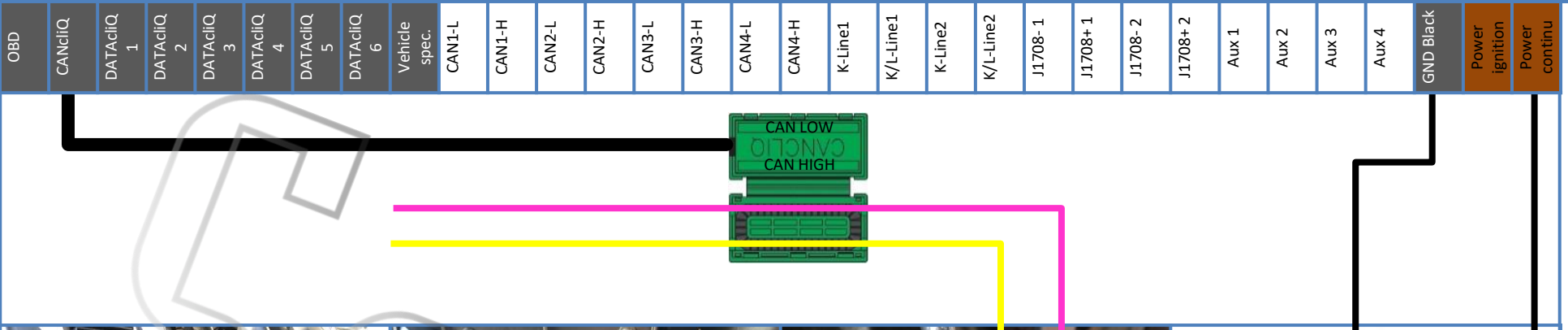

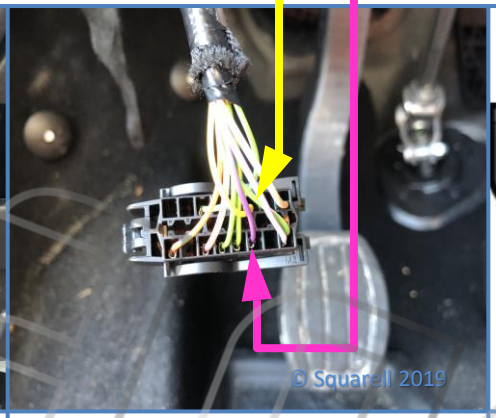

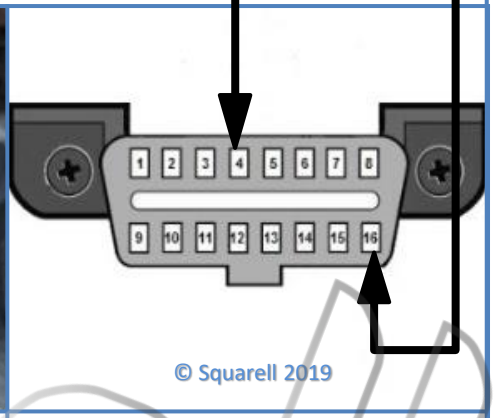

Location

Find the OBD connector at the driver side. Located underneath the dashboard on the left side.

Remove the OBD connector from the clips to get access.

CANbus

Untwist the pin 6 Pink and pin 14 Yellow wires.

Place the Pink wire from pin 6 in the CAN High Slot.
Place the Yellow wire from pin 14 in the CAN Low slot.
Close the CANcliQ.

Power + Ground
Connections in OBD connector

Ground (KL31) :
OBD connector pin 4 and pin 5

Continuous Power (KL30) :
Pin 16 wire OBD connector

Warning! CANcliQ or DatacliQ closes only once. Please repower the Squarell Device after the installation is completed. Please connect Squarell devices to a 10V to 30V power supply. Please use certified crimping tools to connect the wires.

Citroën Berlingo Multispace (E) 2018+

A B C D E F G H I J K L M N O P Q R S T U V W X Y Z

Copyright © Squarell 2019

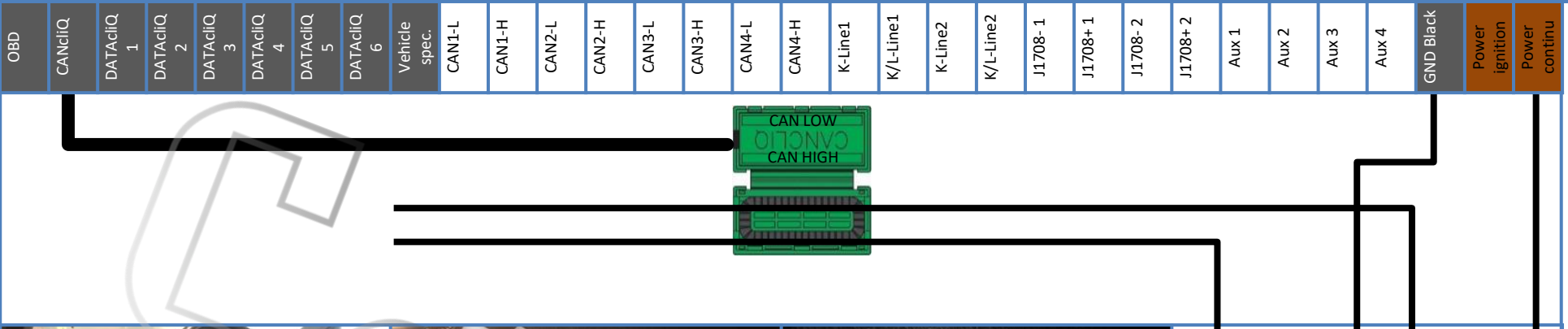

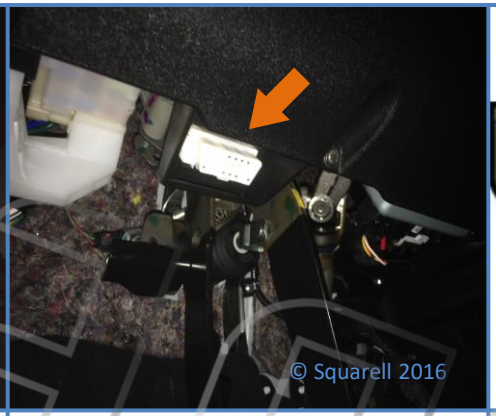

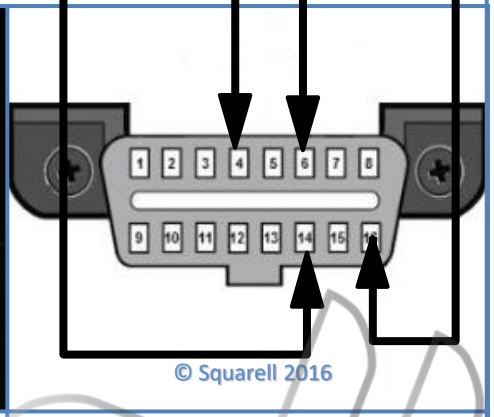

Location

Find the OBD connector at the driver side
Located under the dashboard part above the clutch pedal.

Remove the OBD connector from the clips to get access.

CANbus

Untwist the pin 6 and 14 wires.

Place the wire of pin 6 in the CAN High Slot.
Place the wire of pin 14 in the CAN Low slot.
Close CANcliQ.

Power + Ground
Connections in OBD connector

Ground (KL31) :
OBD connector pin 4 and pin 5

Continuous Power (KL30) :
Pin 16 OBD connector

Warning! CANcliQ or DatacliQ closes only once. Please repower the Squarell Device after the installation is completed. Please connect Squarell devices to a 10V to 30V power supply. Please use certified crimping tools to connect the wires.

Citroën C1 (P) 2014 +

A B C D E F G H I J K L M N O P Q R S T U V W X Y Z

Copyright © Squarell 2016

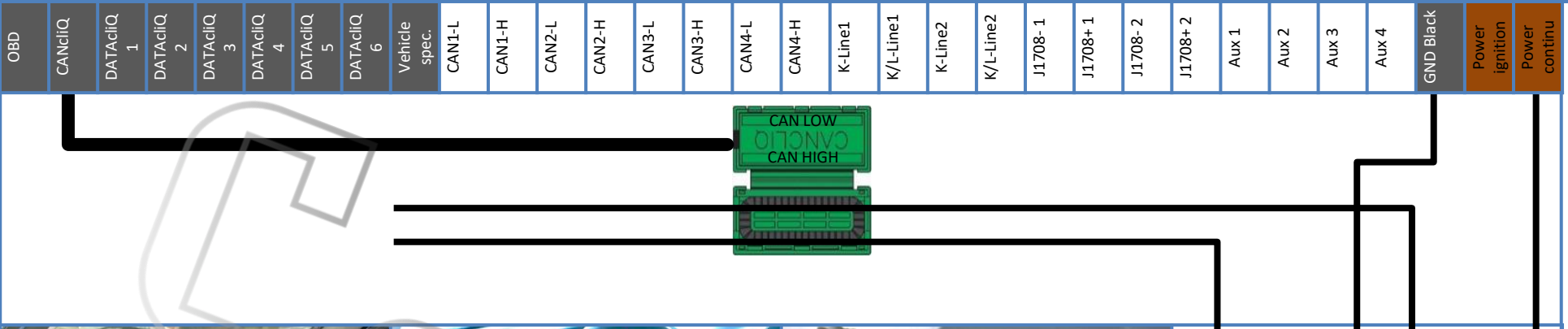

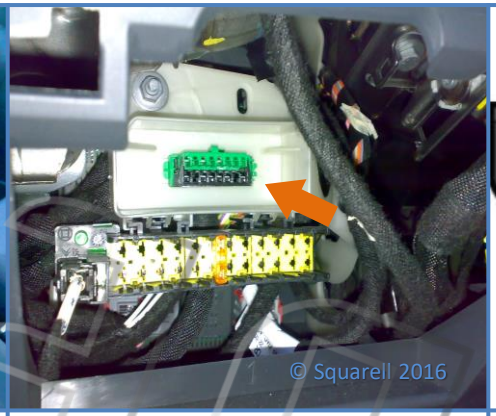

Location

Find the OBD connector at the driver side.
Located behind the lower dashboard cover.

Remove the dashboard cover to find the OBD connector.
Remove the OBD connector from the clips to get access.

CANbus

Untwist the pin 6 and 14 wires.

Place the wire of pin 6 in the CAN High Slot.
Place the wire of pin 14 in the CAN Low slot.
Close CANcliQ.

Power + Ground
Connections in OBD Connector

Ground (KL31) :
OBD connector pin 4 and pin 5

Continuous Power (KL30) :
Pin 16 OBD connector

Warning! CANcliQ or DatacliQ closes only once. Please repower the Squarell Device after the installation is completed. Please connect Squarell devices to a 10V to 30V power supply. Please use certified crimping tools to connect the wires.

Citroën C3 (C) 2004 - 2010

A B C D E F G H I J K L M N O P Q R S T U V W X Y Z

Copyright © Squarell 2016

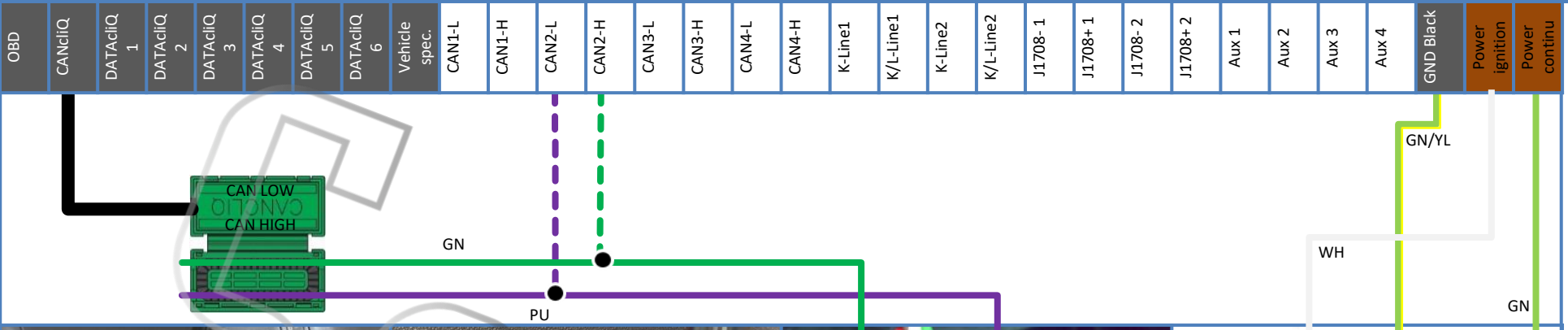

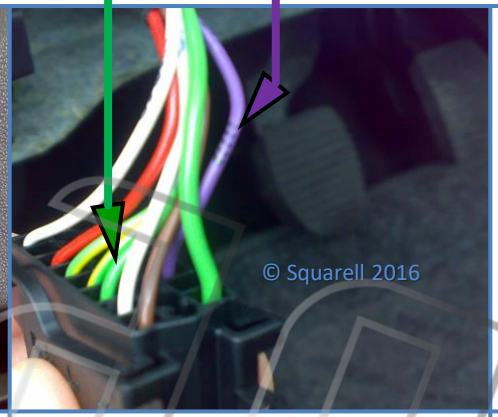

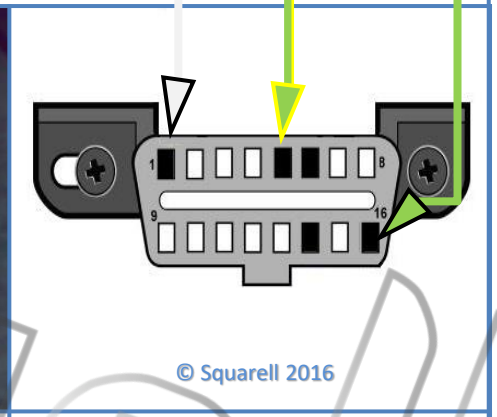

Location

Remove the dashboard panel behind the steering wheel to get to the OBD connector.

Remove the OBD connector from the socket.

Untwist the Green and Purple wires.
Green Pin 6 & Purple 14.
Place Green in CAN High slot.
Place Purple in CAN low slot.
Close CANcliQ.

Power + Ground
Connections in OBD connector (Driver side)

Ground (KL31) :
Ground at Pin 5 OBD connector (Green Yellow arrow).

Continuous Power (KL30) :
Pin 16 OBD connector (Green arrow).

Power on Ignition (KL15) :
Blue White wire (White arrow).

Warning! CANcliQ or DatacliQ closes only once. Please repower the Squarell Device after the installation is completed. Please connect Squarell devices to a 10V to 30V power supply. Please use certified crimping tools to connect the wires.

Citroën C3 (S) 2009 - 2016

A B C D E F G H I J K L M N O P Q R S T U V W X Y Z

Copyright © Squarell 2016

OBD	CANcliQ	DATAcliQ 1	DATAcliQ 2	DATAcliQ 3	DATAcliQ 4	DATAcliQ 5	DATAcliQ 6	Vehicle spec.	CAN1-L	CAN1-H	CAN2-L	CAN2-H	CAN3-L	CAN3-H	CAN4-L	CAN4-H	K-Line1	K/L-Line1	K-Line2	K/L-Line2	J1708- 1	J1708+ 1	J1708- 2	J1708+ 2	Aux 1	Aux 2	Aux 3	Aux 4	GND Black	Power ignition	Power continu

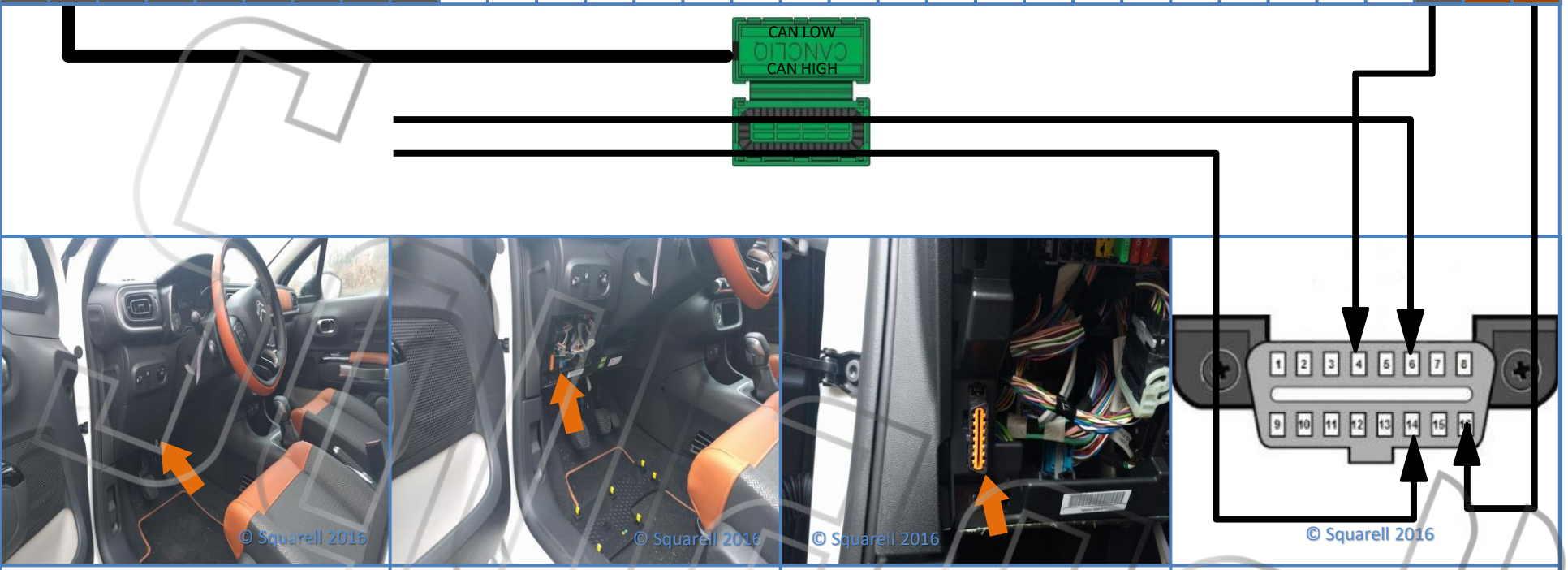

Location

Find the OBD connector at the driver side.
Located behind the left dashboard cover.

Remove the left dashboard cover to find the OBD connector.
Remove the OBD connector from the clips to get access.

CANbus

Untwist the pin 6 and 14 wires.

Place the wire of pin 6 CAN High Slot.
Place the wire of pin 14 in the CAN Low slot.
Close CANcliQ.

Power + Ground
Connections in OBD Connector

Ground (KL31) :
OBD connector pin 4 and pin 5

Continuous Power (KL30) :
Pin 16 OBD connector

Warning! CANcliQ or DatacliQ closes only once. Please repower the Squarell Device after the installation is completed. Please connect Squarell devices to a 10V to 30V power supply. Please use certified crimping tools to connect the wires.

Citroën C3 (2) 2016 +

A B C D E F G H I J K L M N O P Q R S T U V W X Y Z

Copyright © Squarell 2016

OBD	CANcliQ	DATAcliQ 1	DATAcliQ 2	DATAcliQ 3	DATAcliQ 4	DATAcliQ 5	DATAcliQ 6	Vehicle spec.	CAN1-L	CAN1-H	CAN2-L	CAN2-H	CAN3-L	CAN3-H	CAN4-L	CAN4-H	K-Line1	K/L-Line1	K-Line2	K/L-Line2	J1708- 1	J1708+ 1	J1708- 2	J1708+ 2	Aux 1	Aux 2	Aux 3	Aux 4	GND Black	Power ignition	Power continu

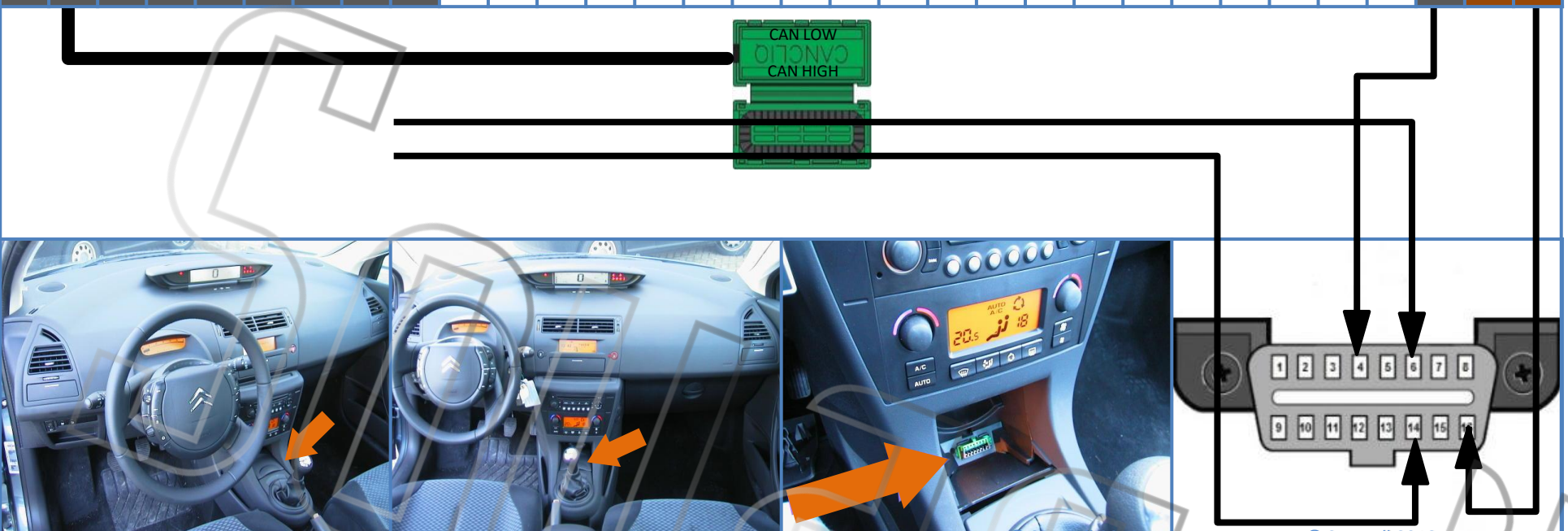

Location

Find the OBD connector at the center consol. Located behind the ashtray.

Remove the ashtray to find the OBD connector.
Remove the OBD connector from the clips to get access.

CANbus

Untwist the pin 6 and 14 wires.

Place the wire of pin 6 in the CAN High Slot.
Place the wire of pin 14 in the CAN Low slot.
Close CANcliQ.

Power + Ground
Connections in OBD Connector

Ground (KL31) :
OBD connector pin 4 and pin 5

Continuous Power (KL30) :
Pin 16 OBD connector

Warning! CANcliQ or DatacliQ closes only once. Please repower the Squarell Device after the installation is completed. Please connect Squarell devices to a 10V to 30V power supply. Please use certified crimping tools to connect the wires.

Citroën C4 (L) 2004 - 2010

A B C D E F G H I J K L M N O P Q R S T U V W X Y Z

Copyright © Squarell 2016

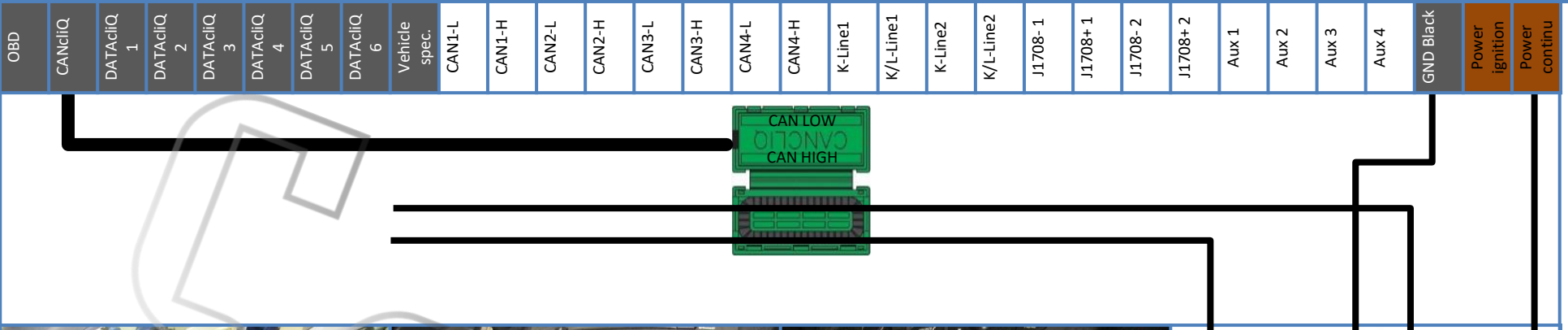

Location

Find the OBD connector at the center console. Located underneath the climate control.

Remove the cover underneath the climate control.
Remove the OBD connector from the clips to get access.

CANbus

Untwist the pin 6 and pin 14 wires.

Place the wire from pin 6 in the CAN High Slot.
Place the wire from pin 14 in the CAN Low slot.
Close CANcliQ.

Power + Ground
Connections in OBD connector

Ground (KL31) :
OBD connector pin 4 wire and pin 5

Continuous Power (KL30) :
Pin 16 wire OBD connector

Warning! CANcliQ or DatacliQ closes only once. Please repower the Squarell Device after the installation is completed. Please connect Squarell devices to a 10V to 30V power supply. Please use certified crimping tools to connect the wires.

Citroën C4 (N) 2010-2014

A B C D E F G H I J K L M N O P Q R S T U V W X Y Z

Copyright © Squarell 2016

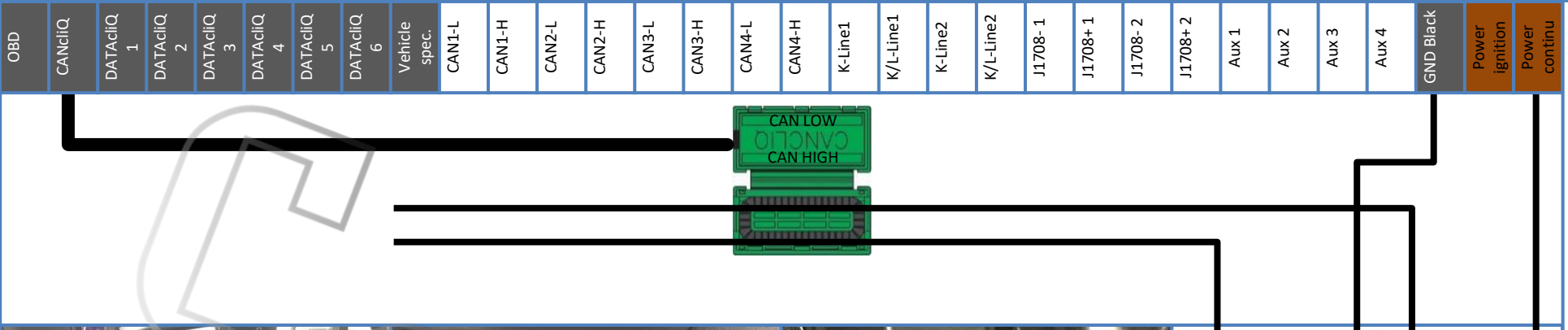

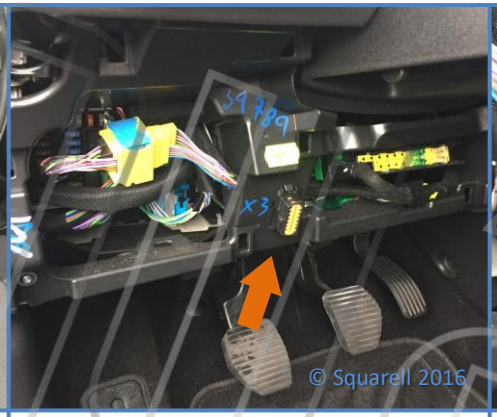

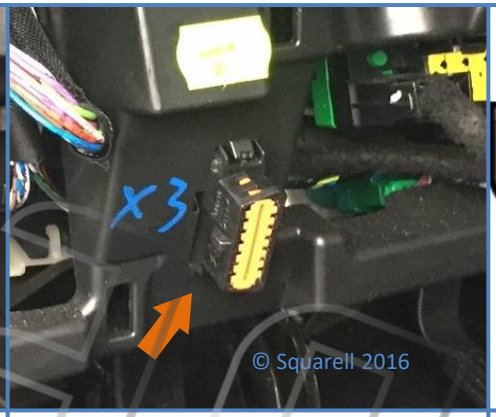

Location

Remove the dashboard panel behind the steering wheel to get to the OBD connector.

Remove the OBD connector from the clip to get access.

CANbus

Untwist the pin 6 and 14 wires.

Place the wire of pin 6 in the CAN High Slot.
Place the wire of pin 14 in the CAN Low slot.
Close CANcliQ.

Power + Ground
Connections in OBD connector

Ground (KL31) :
OBD Connector pin 4 and pin 5.

Continuous Power (KL30) :
Pin 16 OBD connector.

Warning! CANcliQ or DatacliQ closes only once. Please repower the Squarell Device after the installation is completed. Please connect Squarell devices to a 10V to 30V power supply. Please use certified crimping tools to connect the wires.

Citroën C4 Cactus (0) 2014 +

A B C D E F G H I J K L M N O P Q R S T U V W X Y Z

Copyright © Squarell 2016

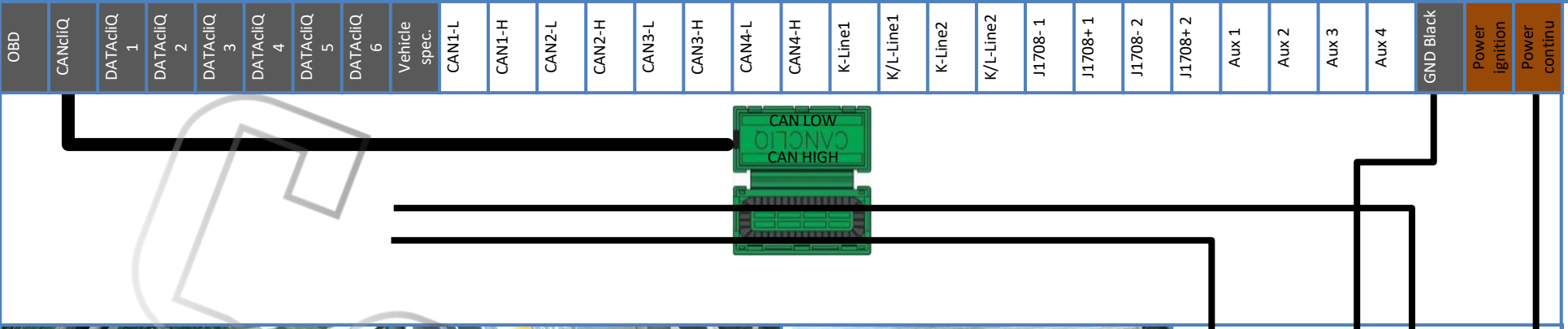

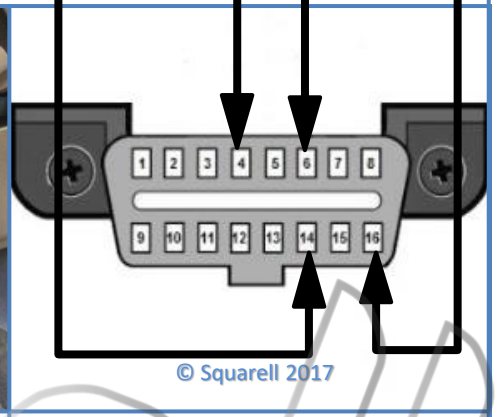

Location

Find the OBD connector at the driver side.
Located behind the left dashboard cover.

Remove the dashboard cover to find the OBD connector.
Remove the OBD connector from the clips to get access.

CANbus

Untwist the pin 6 and pin 14 wires.

Place the wire from pin 6 in the CAN High Slot.
Place the wire from pin 14 in the CAN Low slot.
Close CANcliQ.

Power + Ground
Connections in OBD connector

Ground (KL31) :
OBD connector pin 4 wire and pin 5

Continuous Power (KL30) :
Pin 16 wire OBD connector

Warning! CANcliQ or DatacliQ closes only once. Please repower the Squarell Device after the installation is completed. Please connect Squarell devices to a 10V to 30V power supply. Please use certified crimping tools to connect the wires.

Citroën C4 Picasso (U) 2006-2013

A B C D E F G H I J K L M N O P Q R S T U V W X Y Z

Copyright © Squarell 2016

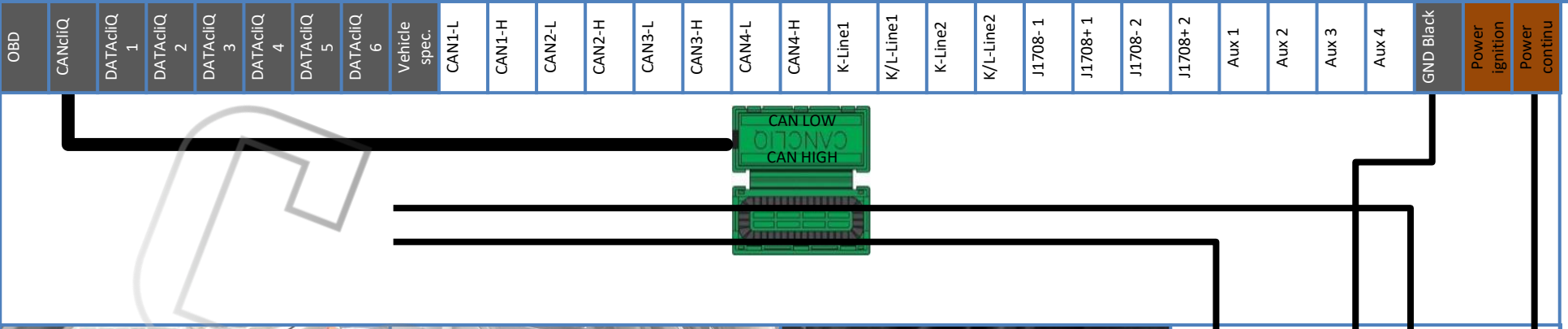

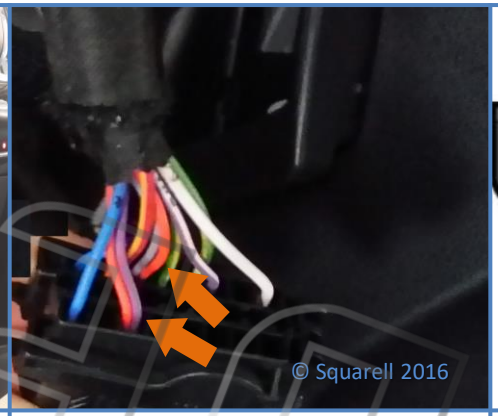

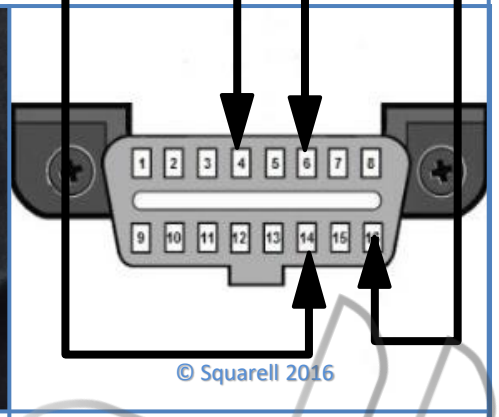

Location

Find the OBD connector underneath the steering wheel. Located behind the lower dashboard panel.

Remove the lower dashboard panel to find the OBD connector
Remove the OBD connector from the clips to get access.

CANbus

Untwist the pin 6 and 14 wires.
Both pins contains two wires: Orange and Purple.

Place one of the 2 wires from pin 6 in the CAN High Slot.
Place one of the 2 wires from pin 14 in the CAN Low slot.
Close CANcliQ.

Power + Ground
Connections in OBD Connector

Ground (KL31) :
OBD connector pin 4 and pin 5

Continuous Power (KL30) :
Pin 16 OBD connector

Warning! CANcliQ or DatacliQ closes only once. Please repower the Squarell Device after the installation is completed. Please connect Squarell devices to a 10V to 30V power supply. Please use certified crimping tools to connect the wires.

Citroën C4 Picasso (3) 2013 +

A B C D E F G H I J K L M N O P Q R S T U V W X Y Z

Copyright © Squarell 2016

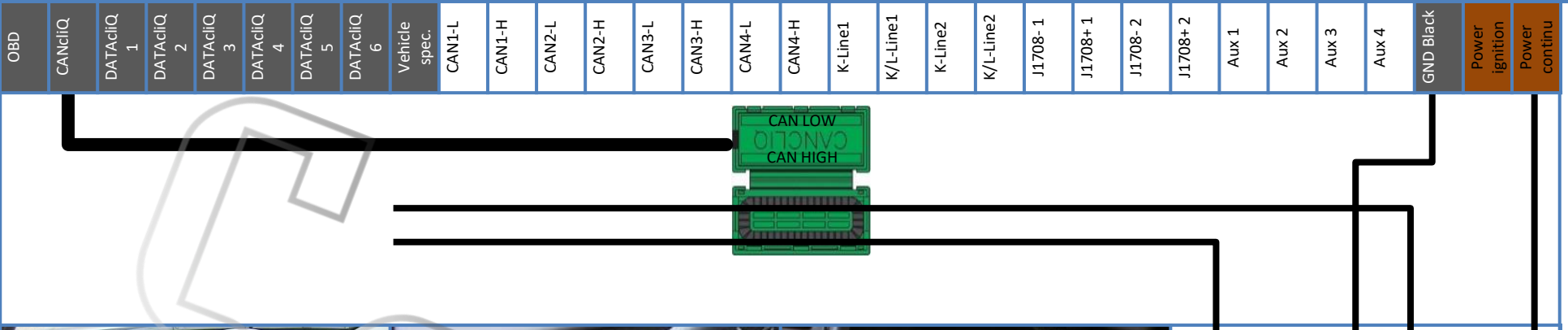

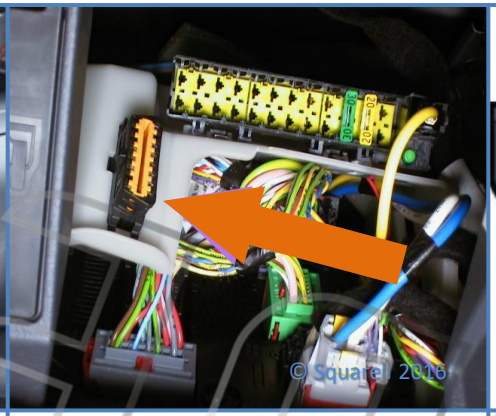

Location

Find the OBD connector underneath the steering wheel. Located behind the lower dashboard panel.

Remove the lower dashboard panel to find the OBD connector
Remove the OBD connector from the clips to get access.

CANbus

Untwist the pin 6 and 14 wires.

Place the wire from pin 6 in the CAN High Slot.
Place the wire from pin 14 in the CAN Low slot.
Close CANcliQ.

Power + Ground
Connections in OBD Connector

Ground (KL31) :
OBD connector pin 4 and pin 5

Continuous Power (KL30) :
Pin 16 OBD connector

Warning! CANcliQ or DatacliQ closes only once. Please repower the Squarell Device after the installation is completed. Please connect Squarell devices to a 10V to 30V power supply. Please use certified crimping tools to connect the wires.

Citroën C5 (1st gen) 2004 - 2008

Copyright © Squarell 2016

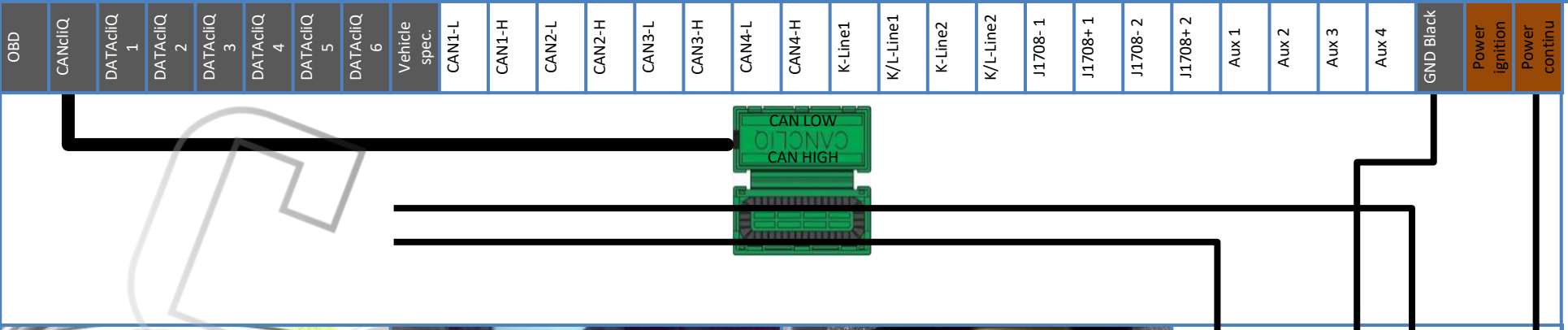

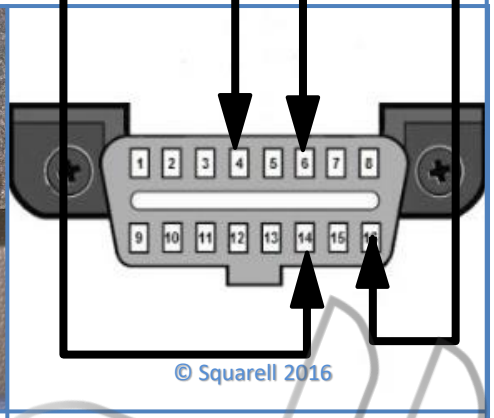

Location

Find the OBD connector underneath the armrest.

Remove the armrest inlay to find the OBD connector
Remove the OBD connector from the clips to get access.

CANbus

Untwist the pin 6 and 14 wires.

Place the wire from pin 6 in the CAN High Slot.
Place the wire from pin 14 in the CAN Low slot.
Close CANcliQ.

Power + Ground
Connections in OBD Connector

Ground (KL31) :
OBD connector pin 4 and pin 5

Continuous Power (KL30) :
Pin 16 OBD connector

Warning! CANcliQ or DatacliQ closes only once. Please repower the Squarell Device after the installation is completed. Please connect Squarell devices to a 10V to 30V power supply. Please use certified crimping tools to connect the wires.

Citroën C5 (R) 2007-2017

A B C D E F G H I J K L M N O P Q R S T U V W X Y Z

Copyright © Squarell 2016

OBD	CANcliQ	DATAcliQ 1	DATAcliQ 2	DATAcliQ 3	DATAcliQ 4	DATAcliQ 5	DATAcliQ 6	Vehicle spec.	CAN1-L	CAN1-H	CAN2-L	CAN2-H	CAN3-L	CAN3-H	CAN4-L	CAN4-H	K-Line1	K/L-Line1	K-Line2	K/L-Line2	J1708- 1	J1708+ 1	J1708- 2	J1708+ 2	Aux 1	Aux 2	Aux 3	Aux 4	GND Black	Power ignition	Power continu

Location

Remove the dashboard panel behind the steering wheel to get to the OBD connector.

Remove the OBD connector from the clip to get access.

CANbus

Untwist the pin 6 and 14 wires.

Place the wire of pin 6 in the CAN High Slot.
Place the wire of pin 14 in the CAN Low slot.
Close CANcliQ.

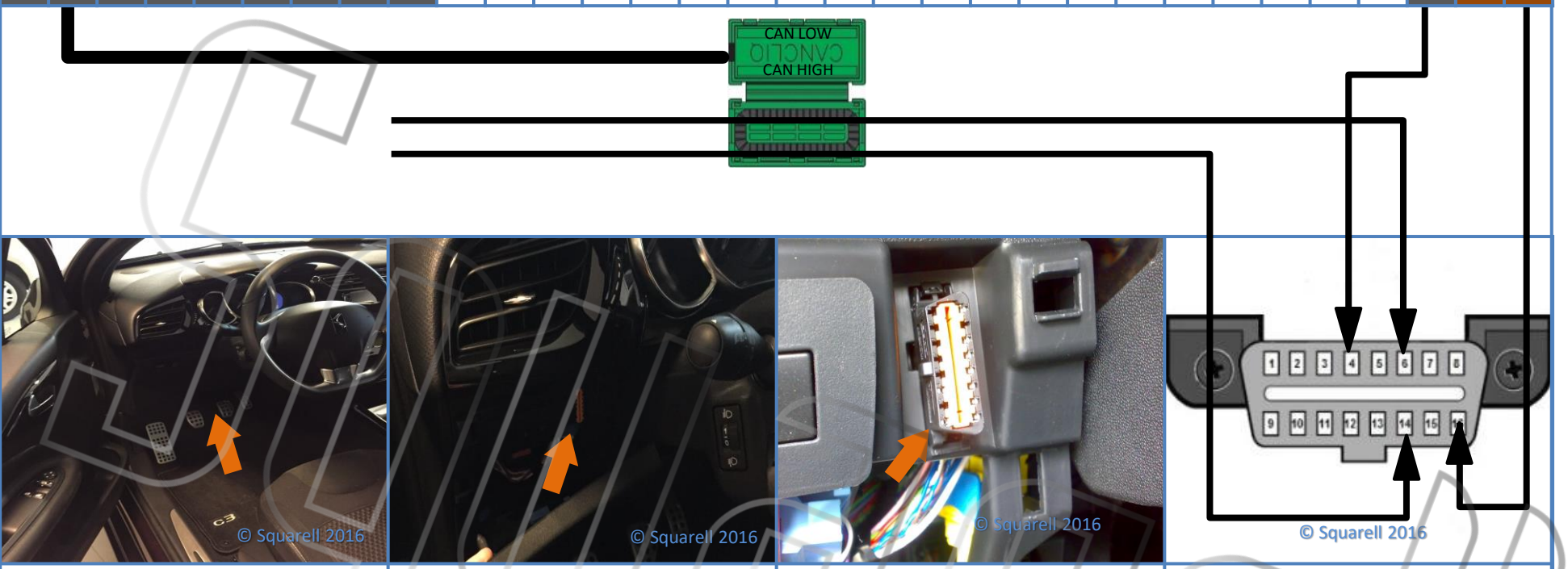

Power + Ground
Connections in OBD connector

Ground (KL31) :
OBD Connector pin 4 and pin 5.

Continuous Power (KL30) :
Pin 16 OBD connector.

Warning! CANcliQ or DatacliQ closes only once. Please repower the Squarell Device after the installation is completed. Please connect Squarell devices to a 10V to 30V power supply. Please use certified crimping tools to connect the wires.

Citroën DS3 (A5FD) 2009-2015

A B C D E F G H I J K L M N O P Q R S T U V W X Y Z

Copyright © Squarell 2016

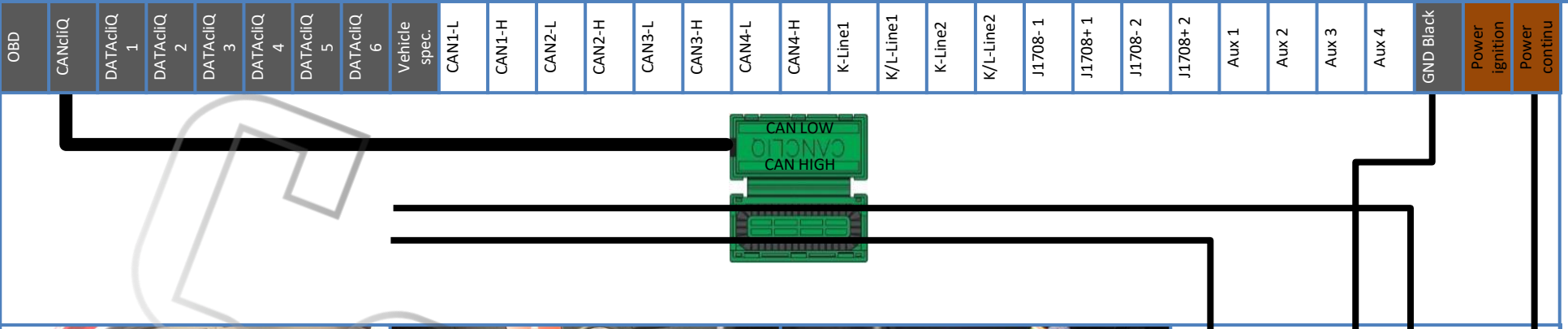

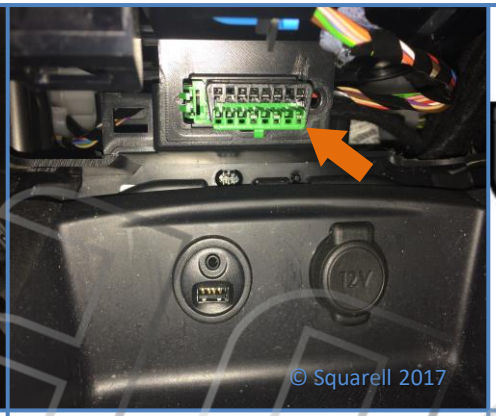

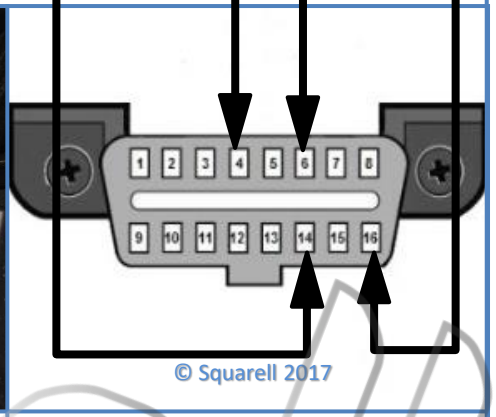

Location

Find the OBD connector which is Located underneath the center console. Behind a cover above the USB/AUX and 12v lighter panel.

Remove the panel above the media/12v lighter panel to gain access to the OBD connector.
Remove the OBD connector from the clips to gain access.

CANbus

Untwist the pin 6 and pin 14 wires.

Place the wire from pin 6 in the CAN High Slot.
Place the wire from pin 14 in the CAN Low slot.
Close CANcliQ.

Power + Ground
Connections in OBD connector

Ground (KL31) :
OBD pin 4 and 5

Continuous Power (KL30) :
OBD pin 16

Warning! CANcliQ or DatacliQ closes only once. Please repower the Squarell Device after the installation is completed. Please connect Squarell devices to a 10V to 30V power supply. Please use certified crimping tools to connect the wires.

Citroën DS4 (N) 2010-2015

A B C D E F G H I J K L M N O P Q R S T U V W X Y Z

Copyright © Squarell 2016

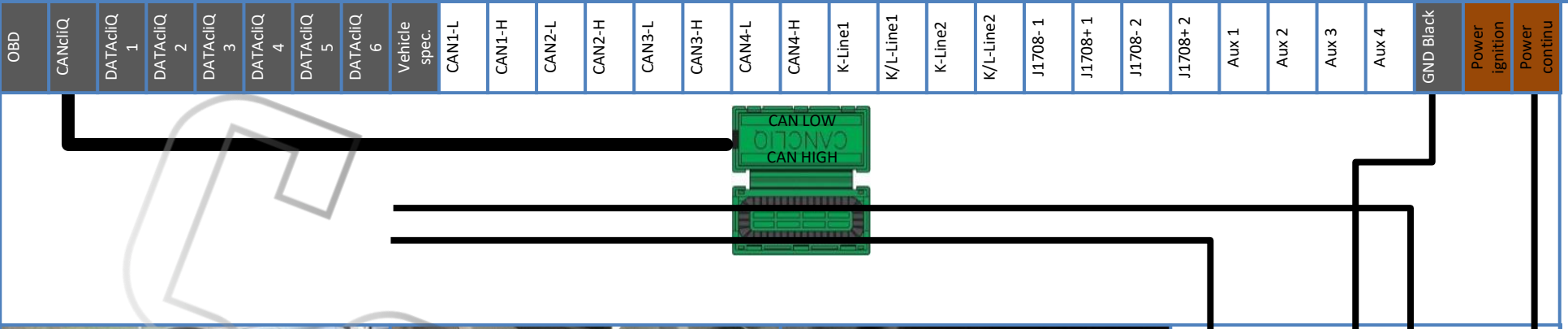

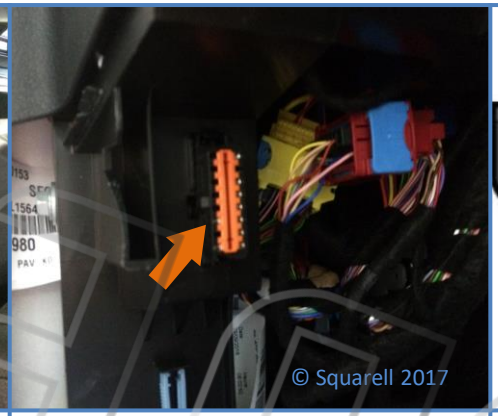

Location

Find the OBD connector at the driver side.
Located behind the lower dashboard panel.

Remove the lower dashboard panel to find the OBD connector.
Remove the OBD connector from the clips to get access.

CANbus

Untwist the pin 6 Blue and pin 14 Pink wires.

Place the Blue wire from pin 6 in the CAN High Slot.
Place the Pink wire from pin 14 in the CAN Low slot.
Close CANcliQ.

Power + Ground
Connections in OBD connector

Ground (KL31) :
OBD connector pin 4 Black wire and pin 5

Continuous Power (KL30) :
Pin 16 White wire OBD connector

Warning! CANcliQ or DatacliQ closes only once. Please repower the Squarell Device after the installation is completed. Please connect Squarell devices to a 10V to 30V power supply. Please use certified crimping tools to connect the wires.

Citroën SpaceTourer (3) 2016+

A B C D E F G H I J K L M N O P Q R S T U V W X Y Z

Copyright © Squarell 2016

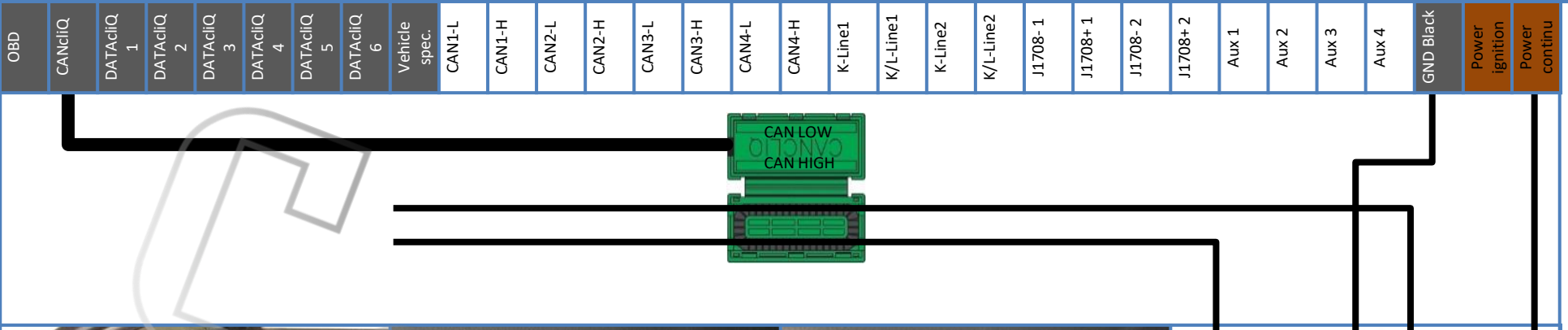

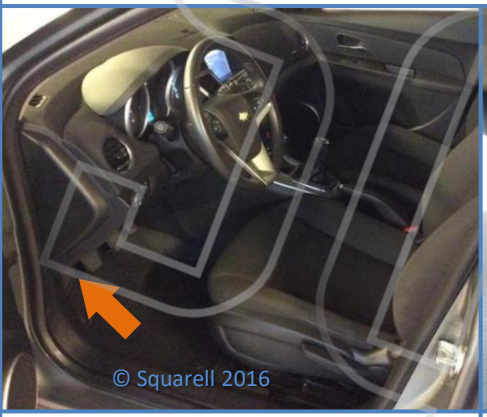

Location

Find the OBD connector underneath the dashboard. Located at the drivers side.

Remove the OBD connector from the clips to get access.

CANbus

Untwist the pin 6 and 14 wires.

Place the wire from pin 6 in the CAN High Slot.
Place the wire from pin 14 in the CAN Low slot.
Close CANcliQ.

Power + Ground
Connections in OBD Connector

Ground (KL31) :
OBD connector pin 4 and pin 5

Continuous Power (KL30) :
Pin 16 OBD connector

Warning! CANcliQ or DatacliQ closes only once. Please repower the Squarell Device after the installation is completed. Please connect Squarell devices to a 10V to 30V power supply. Please use certified crimping tools to connect the wires.

Chevrolet Cruze (J300) 2008 - 2016

A B C D E F G H I J K L M N O P Q R S T U V W X Y Z

Copyright © Squarell 2016

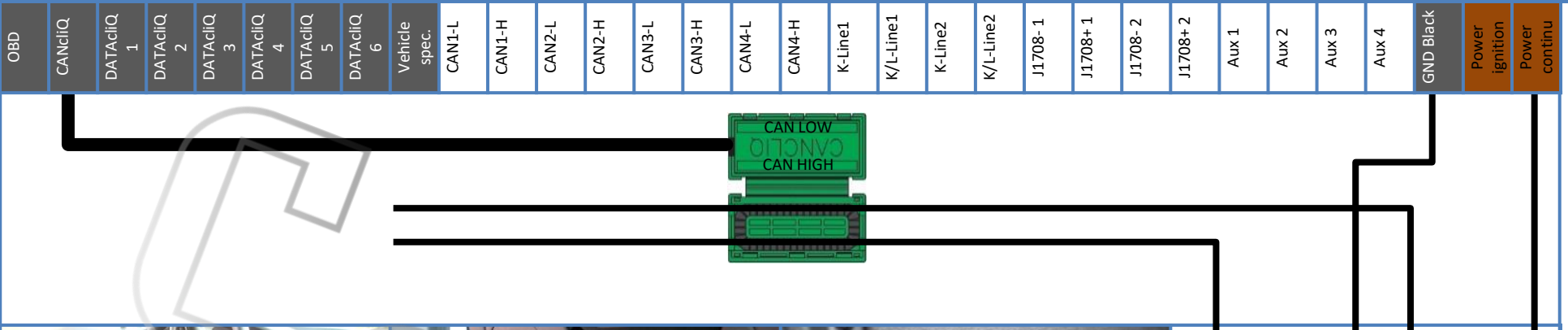

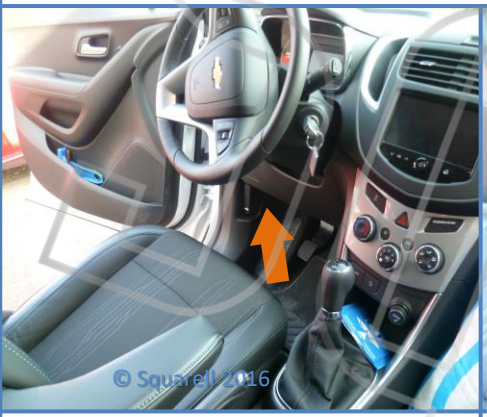

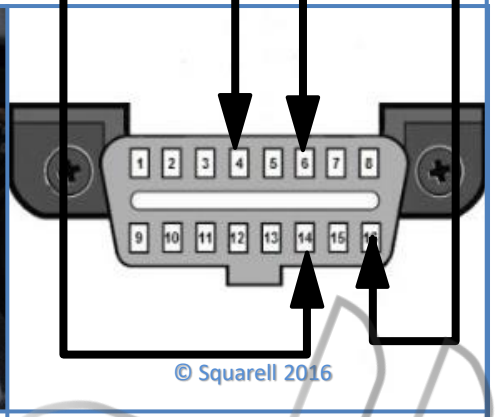

Location

Find the OBD connector underneath the dashboard. Located at the drivers side.

Remove the OBD connector from the clips to get access.

CANbus

Untwist the pin 6 and 14 wires.

Place the wire from pin 6 in the CAN High Slot.
Place the wire from pin 14 in the CAN Low slot.
Close CANcliQ.

Power + Ground
Connections in OBD Connector

Ground (KL31) :
OBD connector pin 4 and pin 5

Continuous Power (KL30) :
Pin 16 OBD connector

Warning! CANcliQ or DatacliQ closes only once. Please repower the Squarell Device after the installation is completed. Please connect Squarell devices to a 10V to 30V power supply. Please use certified crimping tools to connect the wires.

Chevrolet Trax (KL1B) 2013 +

A B C D E F G H I J K L M N O P Q R S T U V W X Y Z

Copyright © Squarell 2016

OBD	CANcliQ	DATAcliQ 1	DATAcliQ 2	DATAcliQ 3	DATAcliQ 4	DATAcliQ 5	DATAcliQ 6	Vehicle spec.	CAN1-L	CAN1-H	CAN2-L	CAN2-H	CAN3-L	CAN3-H	CAN4-L	CAN4-H	K-Line1	K/L-Line1	K-Line2	K/L-Line2	J1708- 1	J1708+ 1	J1708- 2	J1708+ 2	Aux 1	Aux 2	Aux 3	Aux 4	GND Black	Power ignition	Power continu

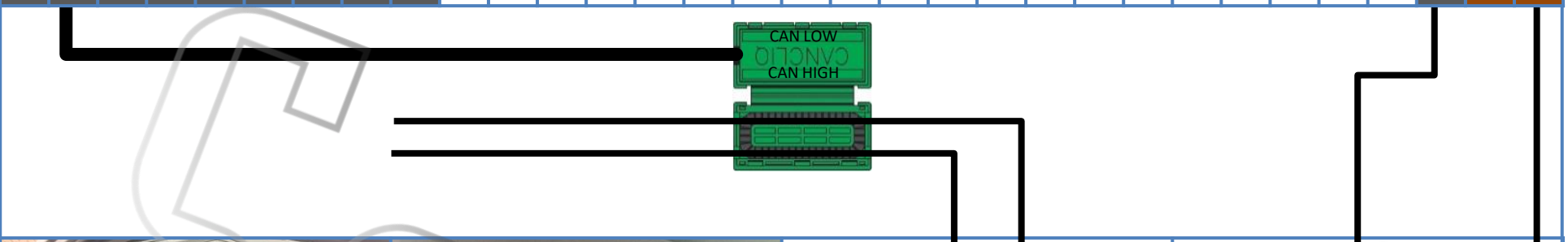

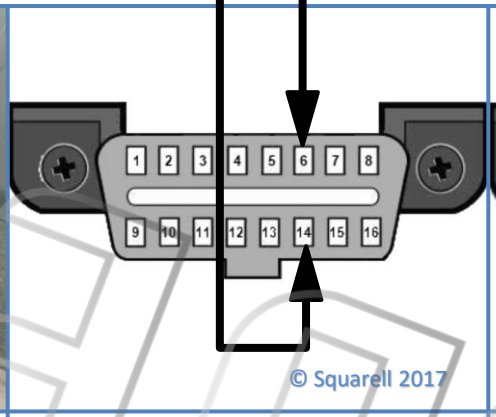

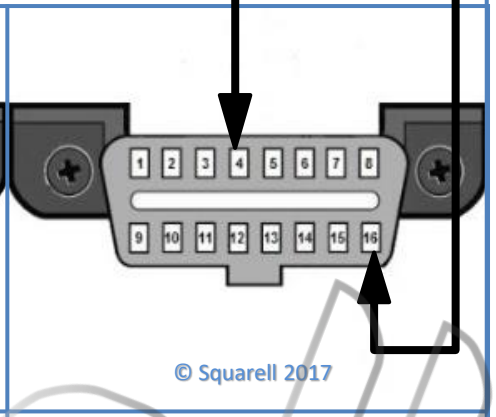

Location

Find the OBD connector at the driver side. Located underneath the dashboard on the left side.

Remove the OBD connector from the clips to get access.

CANbus

Untwist the pin 6 and pin 14 wires.

Place the wire from pin 6 in the CAN High Slot.
Place the wire from pin 14 in the CAN Low slot.
Close CANcliQ.

Power + Ground
Connections in OBD connector

Ground (KL31) :
OBD connector pin 4 wire and pin 5

Continuous Power (KL30) :
Pin 16 wire OBD connector

Warning! CANcliQ or DatacliQ closes only once. Please repower the Squarell Device after the installation is completed. Please connect Squarell devices to a 10V to 30V power supply. Please use certified crimping tools to connect the wires.

Chevrolet Volt (D1JCI) 2011-2015

A B C D E F G H I J K L M N O P Q R S T U V W X Y Z

Copyright © Squarell 2016

OBD	CANcliQ	DATAcliQ 1	DATAcliQ 2	DATAcliQ 3	DATAcliQ 4	DATAcliQ 5	DATAcliQ 6	Vehicle spec.	CAN1-L	CAN1-H	CAN2-L	CAN2-H	CAN3-L	CAN3-H	CAN4-L	CAN4-H	K-Line1	K/L-Line1	K-Line2	K/L-Line2	J1708- 1	J1708+ 1	J1708- 2	J1708+ 2	Aux 1	Aux 2	Aux 3	Aux 4	GND Black	Power ignition	Power continu

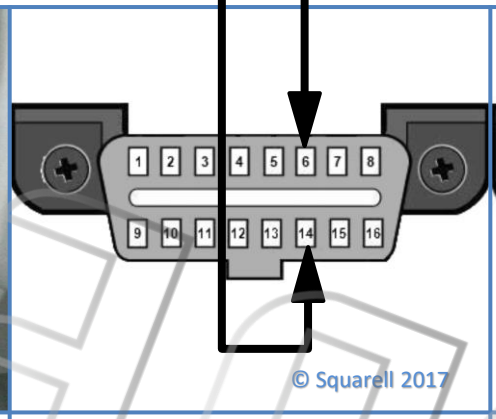

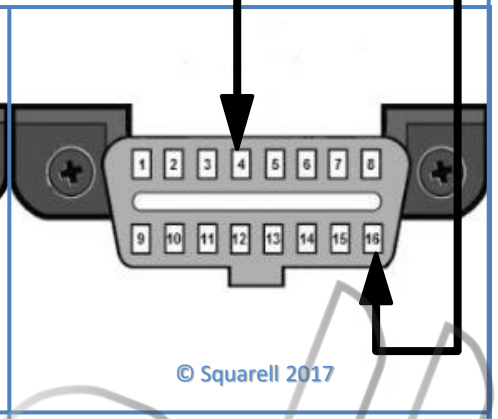

Location

Find the OBD connector at the driver side. Located behind the glove box on the left side.

Remove the glove box to find the OBD connector.
Remove the OBD connector from the clips to get access.

CANbus

Untwist the pin 6 and pin 14 wires.

Place the wire from pin 6 in the CAN High Slot.
Place the wire from pin 14 in the CAN Low slot.
Close CANcliQ.

Power + Ground
Connections in OBD connector

Ground (KL31) :
OBD connector pin 4 wire and pin 5

Continuous Power (KL30) :
Pin 16 wire OBD connector

Warning! CANcliQ or DatacliQ closes only once. Please repower the Squarell Device after the installation is completed. Please connect Squarell devices to a 10V to 30V power supply. Please use certified crimping tools to connect the wires.

Dacia Dokker (SD) 2012 +

A B C D E F G H I J K L M N O P Q R S T U V W X Y Z

Copyright © Squarell 2016

OBD	CANcliQ	DATAcliQ 1	DATAcliQ 2	DATAcliQ 3	DATAcliQ 4	DATAcliQ 5	DATAcliQ 6	Vehicle spec.	CAN1-L	CAN1-H	CAN2-L	CAN2-H	CAN3-L	CAN3-H	CAN4-L	CAN4-H	K-Line1	K/L-Line1	K-Line2	K/L-Line2	J1708- 1	J1708+ 1	J1708- 2	J1708+ 2	Aux 1	Aux 2	Aux 3	Aux 4	GND Black	Power ignition	Power continu

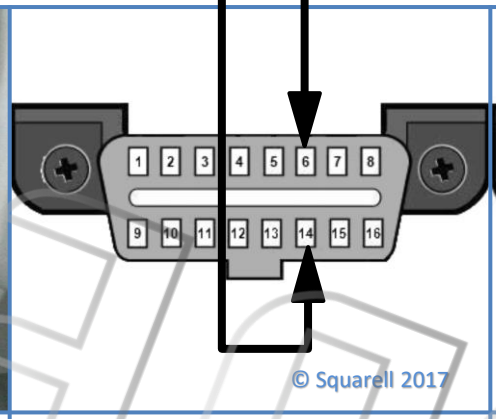

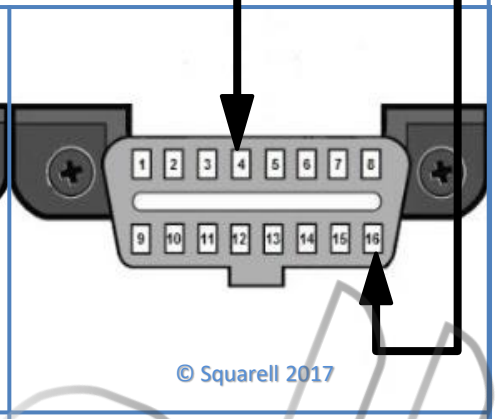

Location

Find the OBD connector at the driver side. Located behind the glove box on the left side.

Remove the glove box to find the OBD connector.
Remove the OBD connector from the clips to get access.

CANbus

Untwist the pin 6 and pin 14 wires.

Place the wire from pin 6 in the CAN High Slot.
Place the wire from pin 14 in the CAN Low slot.
Close CANcliQ.

Power + Ground
Connections in OBD connector

Ground (KL31) :
OBD connector pin 4 wire and pin 5

Continuous Power (KL30) :
Pin 16 wire OBD connector

Warning! CANcliQ or DatacliQ closes only once. Please repower the Squarell Device after the installation is completed. Please connect Squarell devices to a 10V to 30V power supply. Please use certified crimping tools to connect the wires.

Dacia Dokker Stepway (SD) 2012 +

A B C D E F G H I J K L M N O P Q R S T U V W X Y Z

Copyright © Squarell 2016

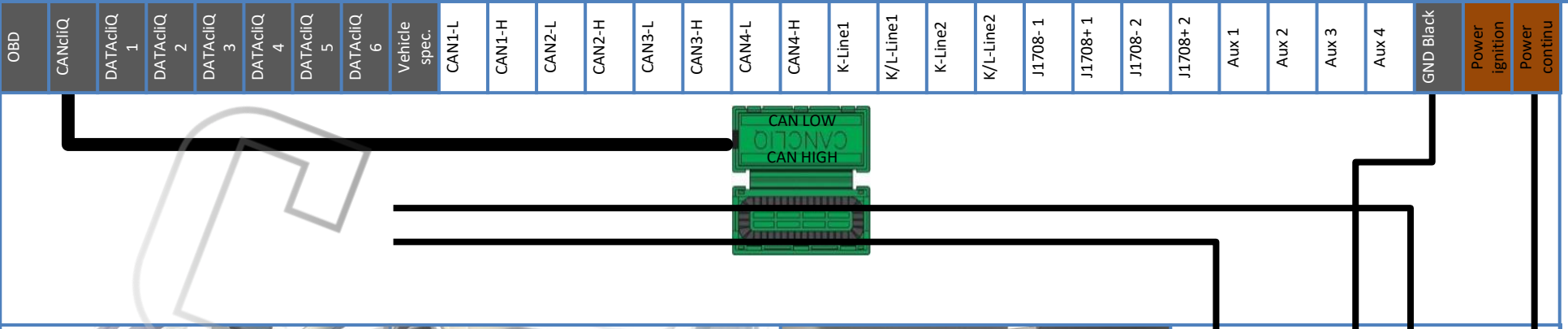

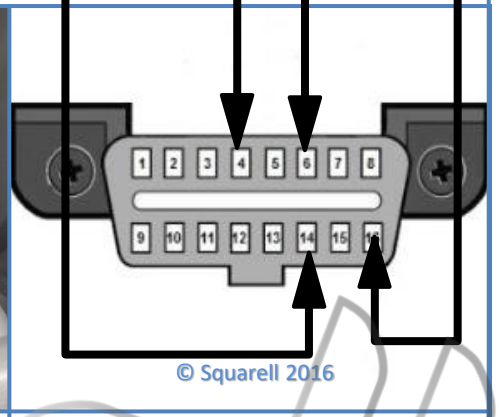

Location

Find the OBD connector in the dashboard cabinet. Located at the passenger side.

Remove the OBD connector from the clips to get access.

CANbus

Untwist the pin 6 and 14 wires.

Place the wire from pin 6 in the CAN High Slot.
Place the wire from pin 14 in the CAN Low slot.
Close CANcliQ.

Power + Ground
Connections in OBD Connector

Ground (KL31) :
OBD connector pin 4 and pin 5

Continuous Power (KL30) :
Pin 16 OBD connector

Warning! CANcliQ or DatacliQ closes only once. Please repower the Squarell Device after the installation is completed. Please connect Squarell devices to a 10V to 30V power supply. Please use certified crimping tools to connect the wires.

Dacia Duster (SD) 2010-2018

A B C D E F G H I J K L M N O P Q R S T U V W X Y Z

Copyright © Squarell 2016

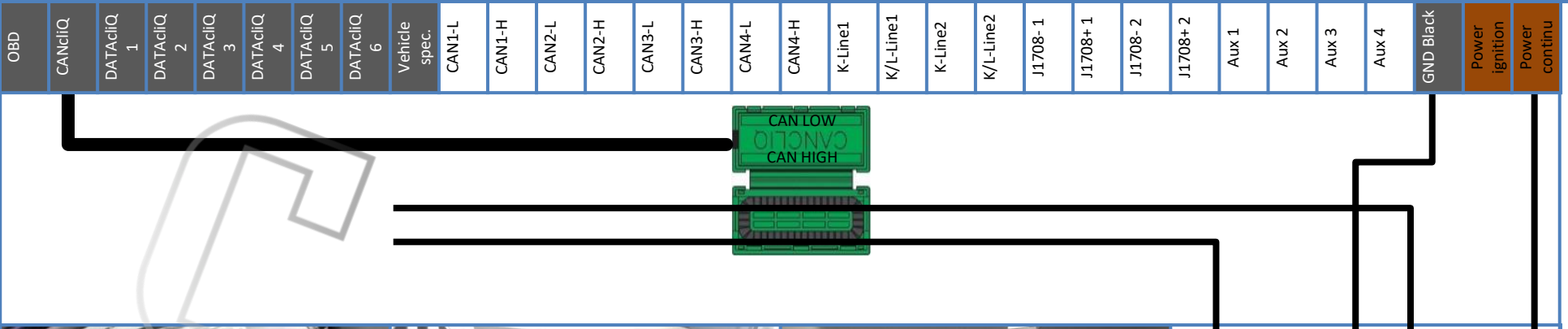

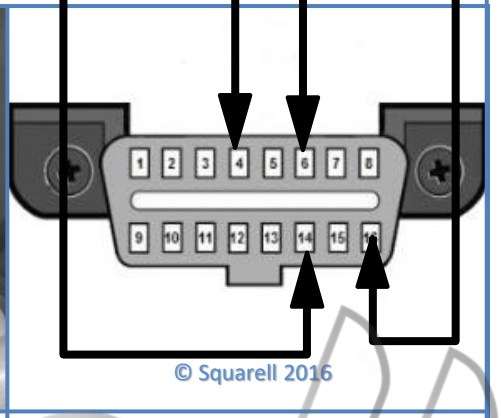

Location

Find the OBD connector in the dashboard cabinet. Located at the passenger side.

Remove the OBD connector from the clips to get access.

CANbus

Untwist the pin 6 and 14 wires.

Place the wire from pin 6 in the CAN High Slot.
Place the wire from pin 14 in the CAN Low slot.
Close CANcliQ.

Power + Ground
Connections in OBD Connector

Ground (KL31) :
OBD connector pin 4 and pin 5

Continuous Power (KL30) :
Pin 16 OBD connector

Warning! CANcliQ or DatacliQ closes only once. Please repower the Squarell Device after the installation is completed. Please connect Squarell devices to a 10V to 30V power supply. Please use certified crimping tools to connect the wires.

Dacia Logan (SD) 2013 +

A B C D E F G H I J K L M N O P Q R S T U V W X Y Z

Copyright © Squarell 2016

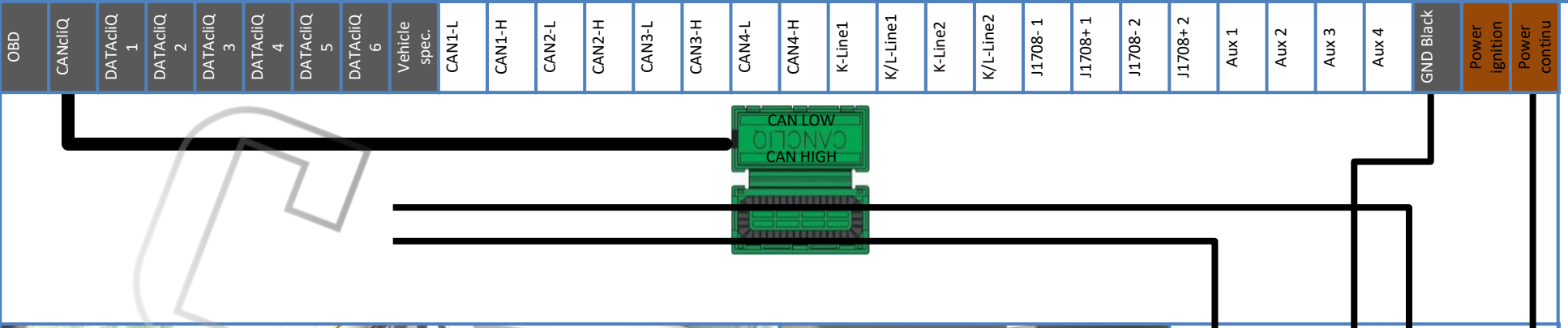

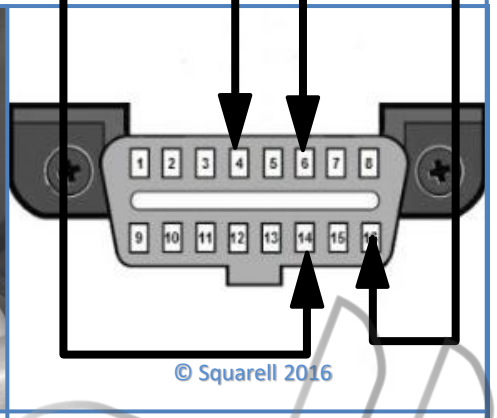

Location

Find the OBD connector in the dashboard cabinet. Located at the passenger side.

Remove the OBD connector from the clips to get access.

CANbus

Untwist the pin 6 and 14 wires.

Place the wire from pin 6 in the CAN High Slot.
Place the wire from pin 14 in the CAN Low slot.
Close CANcliQ.

Power + Ground
Connections in OBD Connector

Ground (KL31) :
OBD connector pin 4 and pin 5

Continuous Power (KL30) :
Pin 16 OBD connector

Warning! CANcliQ or DatacliQ closes only once. Please repower the Squarell Device after the installation is completed. Please connect Squarell devices to a 10V to 30V power supply. Please use certified crimping tools to connect the wires.

Dacia Sandero (SD) 2012 +

A B C D E F G H I J K L M N O P Q R S T U V W X Y Z

Copyright © Squarell 2016

OBD	CANcliQ	DATAcliQ 1	DATAcliQ 2	DATAcliQ 3	DATAcliQ 4	DATAcliQ 5	DATAcliQ 6	Vehicle spec.	CAN1-L	CAN1-H	CAN2-L	CAN2-H	CAN3-L	CAN3-H	CAN4-L	CAN4-H	K-Line1	K/L-Line1	K-Line2	K/L-Line2	J1708- 1	J1708+ 1	J1708- 2	J1708+ 2	Aux 1	Aux 2	Aux 3	Aux 4	GND Black	Power ignition	Power continu

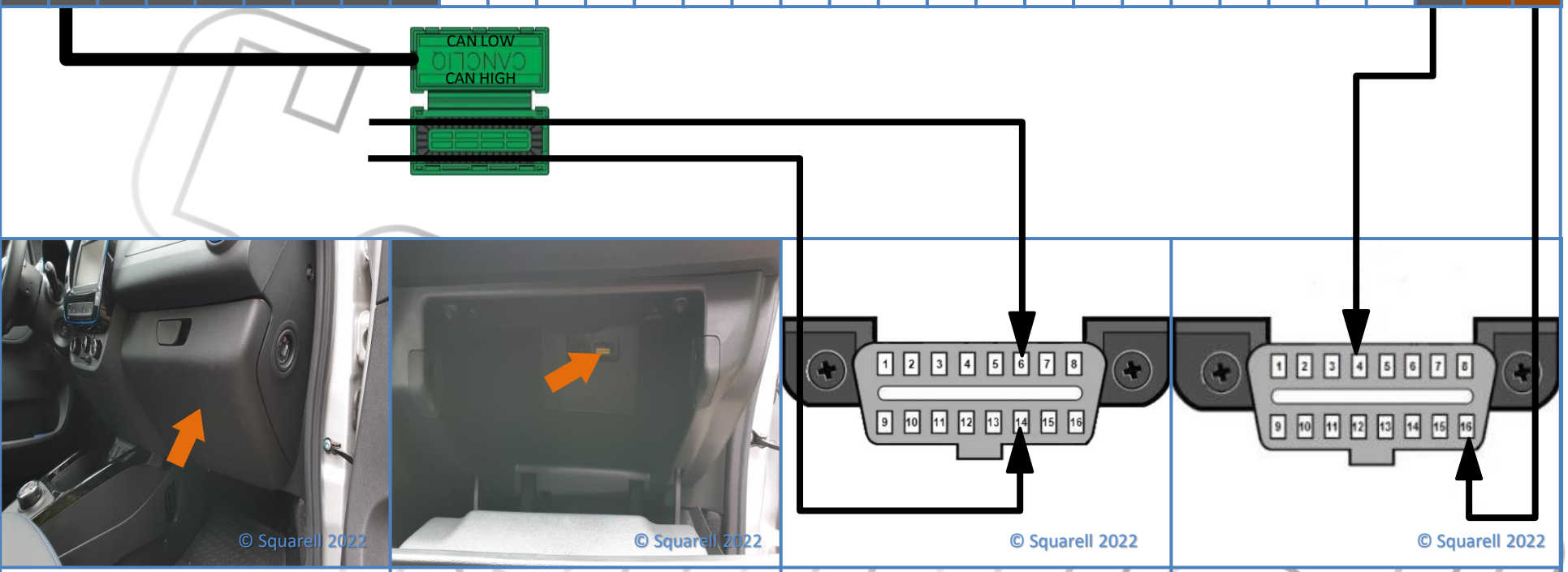

Location

Find the OBD connector at the passenger side. Located in/behind the glovebox.

Remove the panels around the OBD connector to gain access to the backside of the OBD connector.

CANbus

Untwist the pin 6 and pin 14 wires.

Place the Pink wire from pin 6 in the CAN High Slot.
Place the Purple wire from pin 14 in the CAN Low slot.

Close CANcliQ.

Power + Ground
Connections in OBD connector

Ground (KL31) :
OBD connector pin 4 wire and pin 5

Continuous Power (KL30) :
Pin 16 wire OBD connector

Warning! CANcliQ or DatacliQ closes only once. Please repower the Squarell Device after the installation is completed. Please connect Squarell devices to a 10V to 30V power supply. Please use certified crimping tools to connect the wires.

Dacia Spring DBG 2021+

A B C D E F G H I J K L M N O P Q R S T U V W X Y Z

Copyright © Squarell 2022

OBD	CANcliQ	DATAcliQ 1	DATAcliQ 2	DATAcliQ 3	DATAcliQ 4	DATAcliQ 5	DATAcliQ 6	Vehicle spec.	CAN1-L	CAN1-H	CAN2-L	CAN2-H	CAN3-L	CAN3-H	CAN4-L	CAN4-H	K-Line1	K/L-Line1	K-Line2	K/L-Line2	J1708- 1	J1708+ 1	J1708- 2	J1708+ 2	Aux 1	Aux 2	Aux 3	Aux 4	GND Black	Power ignition	Power continu

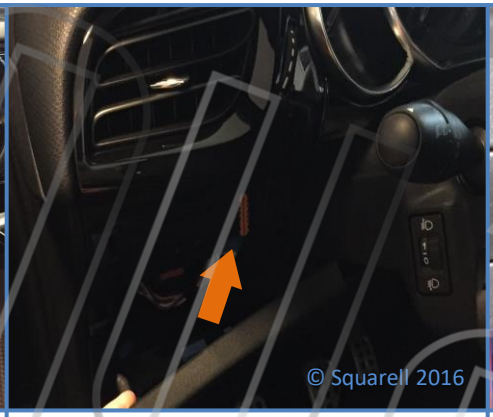

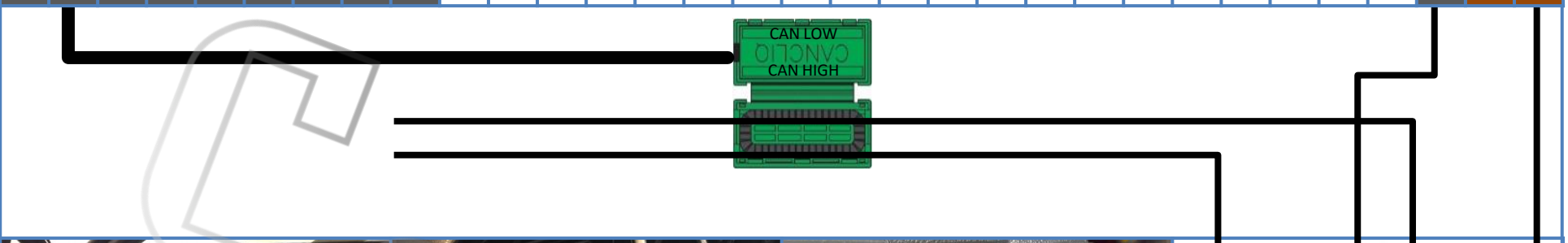

Location

Remove the dashboard panel behind the steering wheel to get to the OBD connector.

Remove the OBD connector from the clip to get access.

CANbus

Untwist the pin 6 and 14 wires.

Place the wire of pin 6 in the CAN High Slot.
Place the wire of pin 14 in the CAN Low slot.
Close CANcliQ.

Power + Ground
Connections in OBD connector

Ground (KL31) :
OBD Connector pin 4 and pin 5.

Continuous Power (KL30) :
Pin 16 OBD connector.

Warning! CANcliQ or DatacliQ closes only once. Please repower the Squarell Device after the installation is completed. Please connect Squarell devices to a 10V to 30V power supply. Please use certified crimping tools to connect the wires.

DS DS3 (S) 2015+

A B C D E F G H I J K L M N O P Q R S T U V W X Y Z

Copyright © Squarell 2016

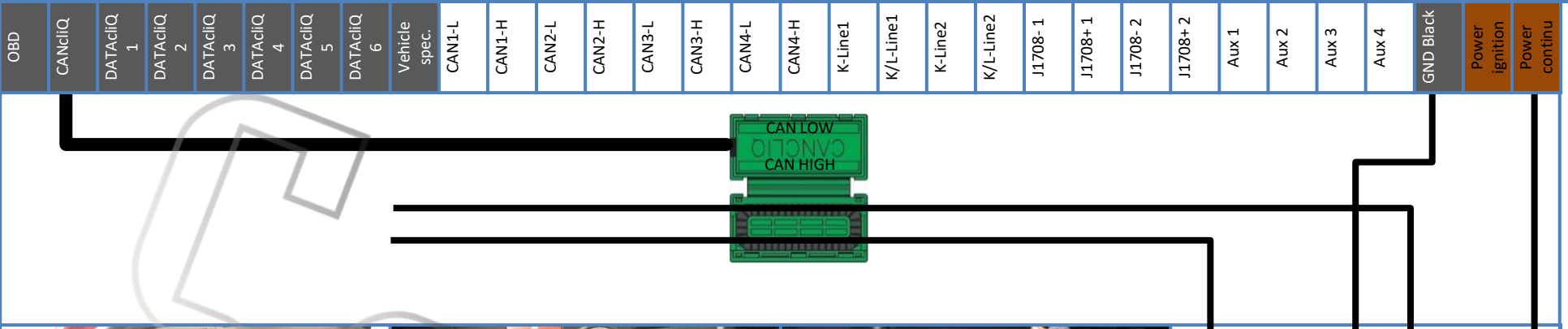

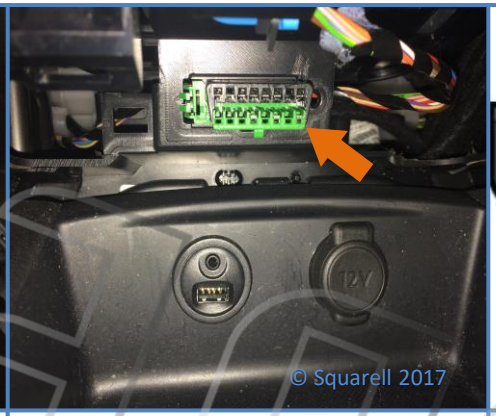

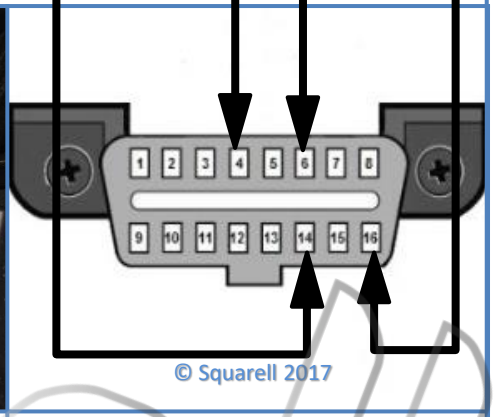

Location

Find the OBD connector which is Located underneath the center console. Behind a cover above the USB/AUX and 12v lighter panel.

Remove the panel above the media/12v lighter panel to gain access to the OBD connector.
Remove the OBD connector from the clips to gain access.

CANbus

Untwist the pin 6 and pin 14 wires.

Place the wire from pin 6 in the CAN High Slot.
Place the wire from pin 14 in the CAN Low slot.
Close CANcliQ.

Power + Ground
Connections in OBD connector

Ground (KL31) :
OBD pin 4 and 5

Continuous Power (KL30) :
OBD pin 16

Warning! CANcliQ or DatacliQ closes only once. Please repower the Squarell Device after the installation is completed. Please connect Squarell devices to a 10V to 30V power supply. Please use certified crimping tools to connect the wires.

DS DS4 Crossback (N) 2016-2018

A B C D E F G H I J K L M N O P Q R S T U V W X Y Z

Copyright © Squarell 2016

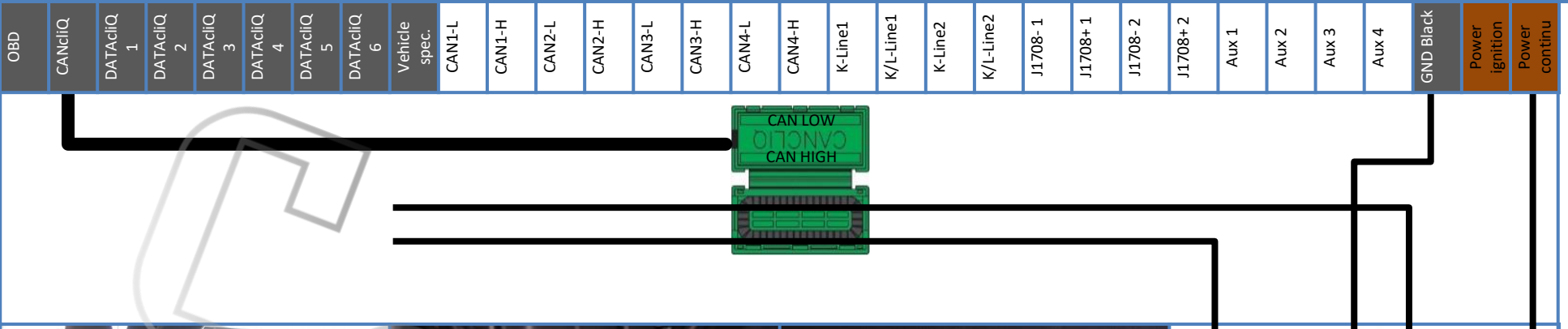

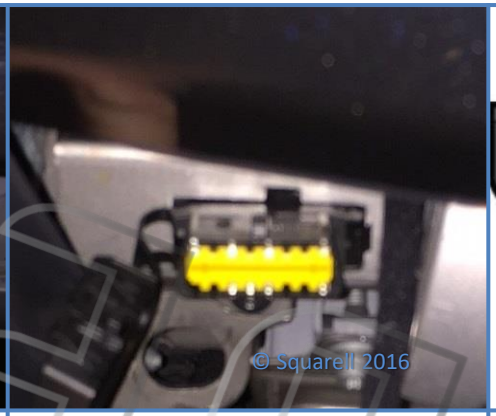

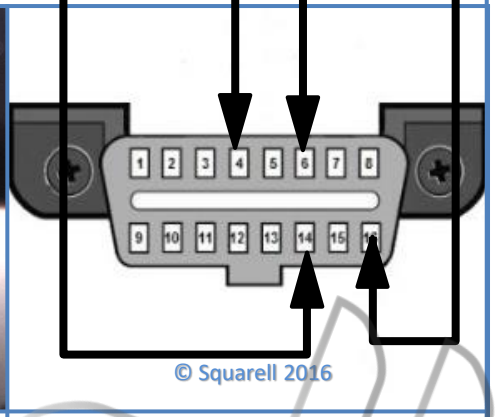

Location

Remove the dashboard panel at the left side of the steering wheel to get to the OBD connector.

Remove the OBD connector from the clip to get access.

CANbus

Untwist the pin 6 and 14 wires.

Place the wire of pin 6 in the CAN High Slot.
Place the wire of pin 14 in the CAN Low slot.
Close CANcliQ.

Power + Ground
Connections in OBD connector

Ground (KL31) :
OBD Connector pin 4 and pin 5.

Continuous Power (KL30) :
Pin 16 OBD connector.

Warning! CANcliQ or DatacliQ closes only once. Please repower the Squarell Device after the installation is completed. Please connect Squarell devices to a 10V to 30V power supply. Please use certified crimping tools to connect the wires.

Fiat 500 (typ 312) 2007 +

A B C D E F G H I J K L M N O P Q R S T U V W X Y Z

Copyright © Squarell 2016

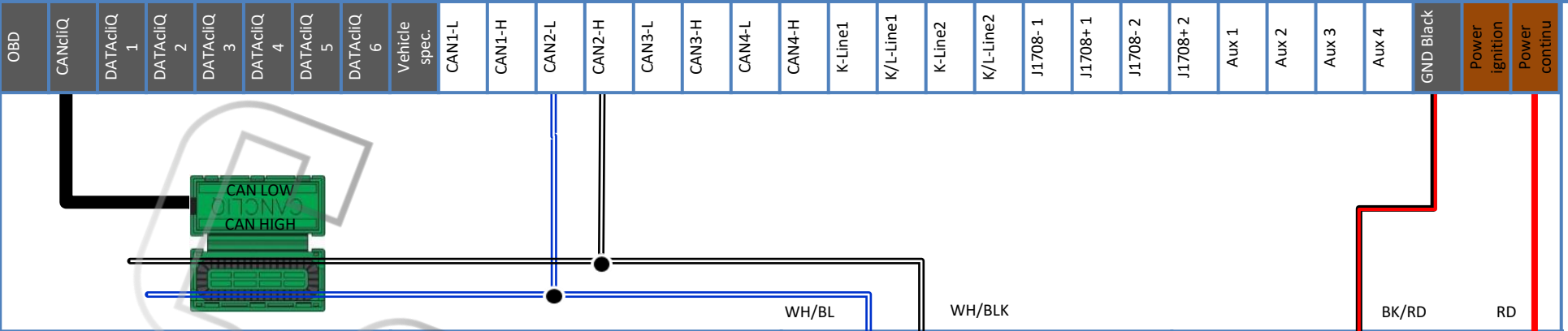

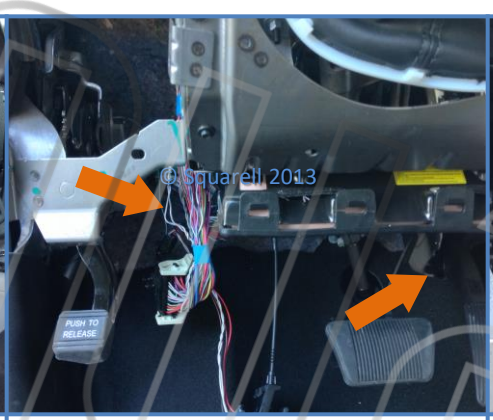

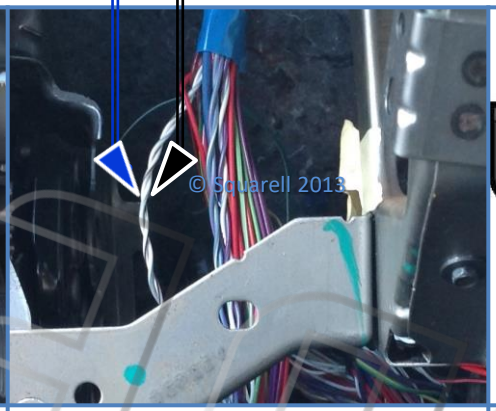

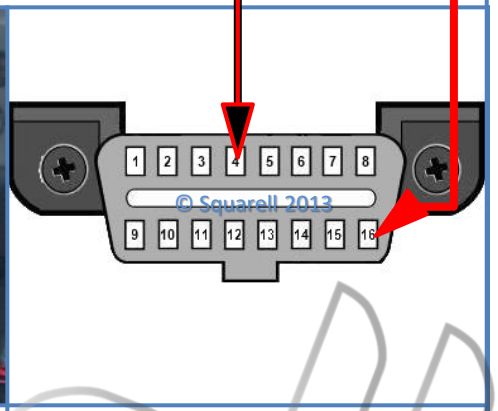

Location

At the drivers side,
Open the dashboard lid (orange arrow).

CANbus

Find the cable loom just left of the steering column (left orange arrow).

Find the twisted pair of White with Black tracer wire and White with Blue tracer wire.

CANbus

Untwist the wires of the loom and find the below wires:
Place vehicle White/Black wire in CAN High.
Place vehicle White/Blue wire in CAN Low.
Close CANcliQ.

Power + Ground

Find the OBD connector below the steering column (right orange arrow).

Ground (KL31) :
OBD Connector pin 4 & 5 (Black/Red arrow)

Continuous Power (KL30) :
OBD Connector pin 16 (Red arrow)

Warning! CANcliQ closes only once. Please connect Squarell devices to a 10V to 48V power supply. Please use certified crimping tools to connect the wires.

Dodge Caravan (5th gen) 2008 +

A B C D E F G H I J K L M N O P Q R S T U V W X Y Z

Copyright © Squarell 2013

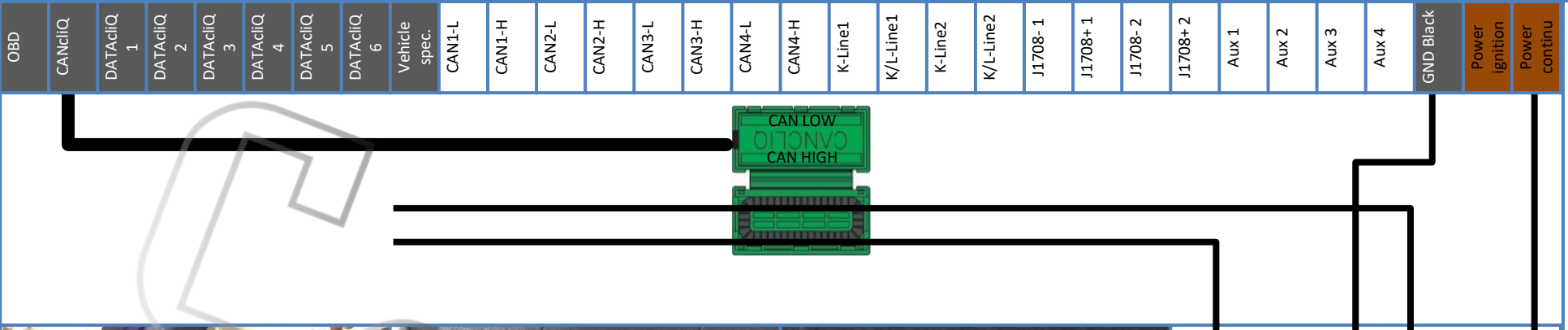

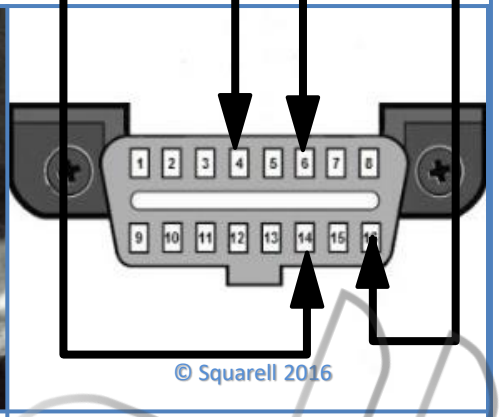

Location

Find the OBD connector at the driver side
Located under the dashboard part above the clutch pedal.

Remove the OBD connector from the clip to get access.

CANbus

Untwist the pin 6 and 14 wires.

Place the wire of pin 6 in the CAN High Slot.
Place the wire of pin 14 in the CAN Low slot.
Close CANcliQ.

Power + Ground
Connections in OBD connector

Ground (KL31) :
OBD Connector pin 4 and pin 5.

Continuous Power (KL30) :
Pin 16 OBD connector.

Warning! CANcliQ or DatacliQ closes only once. Please repower the Squarell Device after the installation is completed. Please connect Squarell devices to a 10V to 30V power supply. Please use certified crimping tools to connect the wires.

Fiat 500L (typ 330) 2012 +

Copyright © Squarell 2016

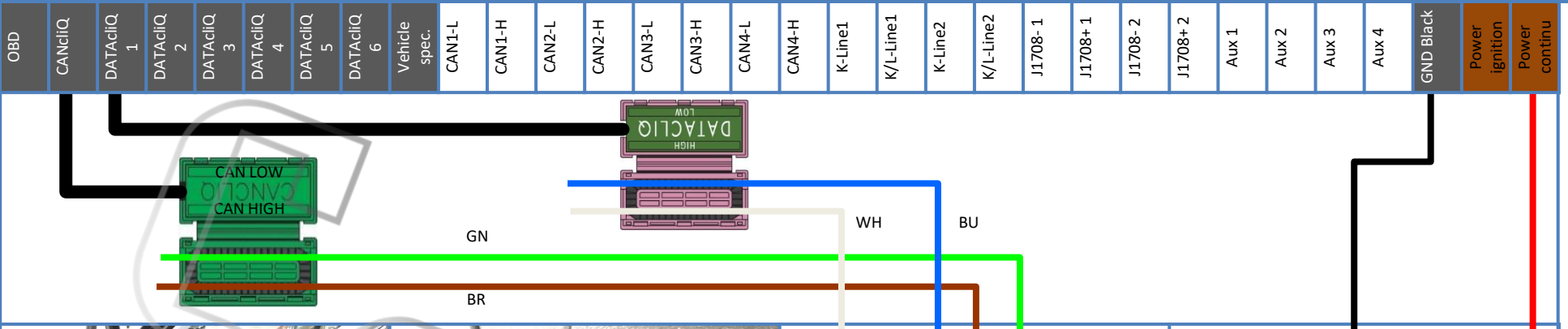

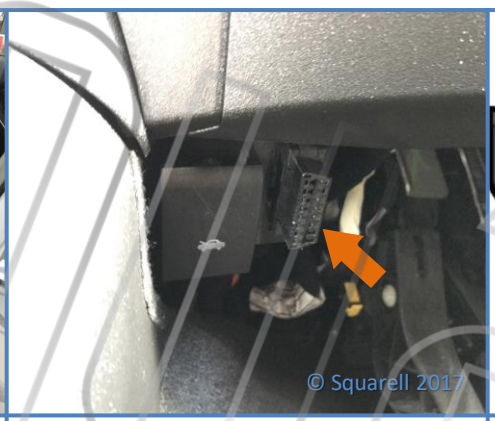

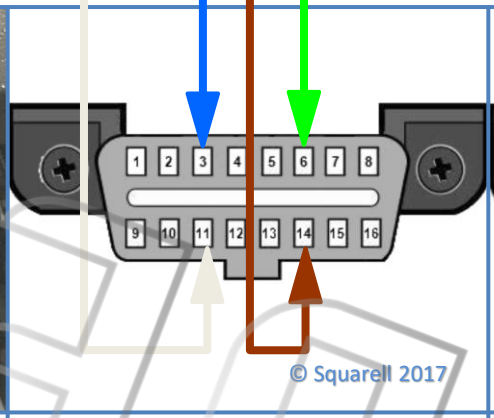

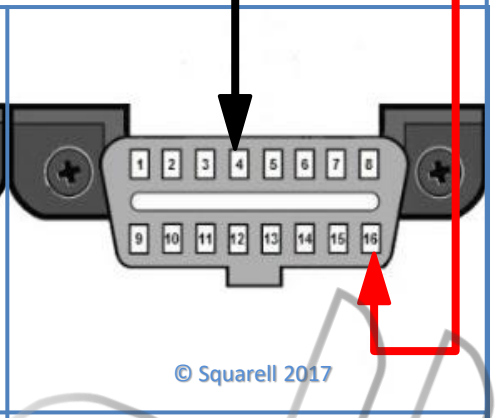

Location

Find the OBD connector at the driver side.
Located underneath the dashboard on the left side.
Remove the OBD connector from the clips to gain access.

CANcliQ

Untwist the pin 6 Green and pin 14 Brown wires.

Place the Green wire from pin 6 in the CAN High Slot.
Place the Brown wire from pin 14 in the CAN Low slot.
Close CANcliQ.

DatacliQ ID 180

Untwist the pin 3 Blue and pin 11 White wires.

Place the Blue wire from pin 3 in the CAN High Slot.
Place the White wire from pin 11 in the CAN Low slot.
Close DatacliQ.

Power + Ground
Connections in OBD connector

Ground (KL31) :
OBD connector pin 4 Black wire and pin 5

Continuous Power (KL30) :
OBD connector pin 16 Red wire.

Warning! CANcliQ or DatacliQ closes only once. Please repower the Squarell Device after the installation is completed. Please connect Squarell devices to a 10V to 30V power supply. Please use certified crimping tools to connect the wires.

Fiat 500X (typ 334) 2014+

A B C D E F G H I J K L M N O P Q R S T U V W X Y Z

Copyright © Squarell 2016

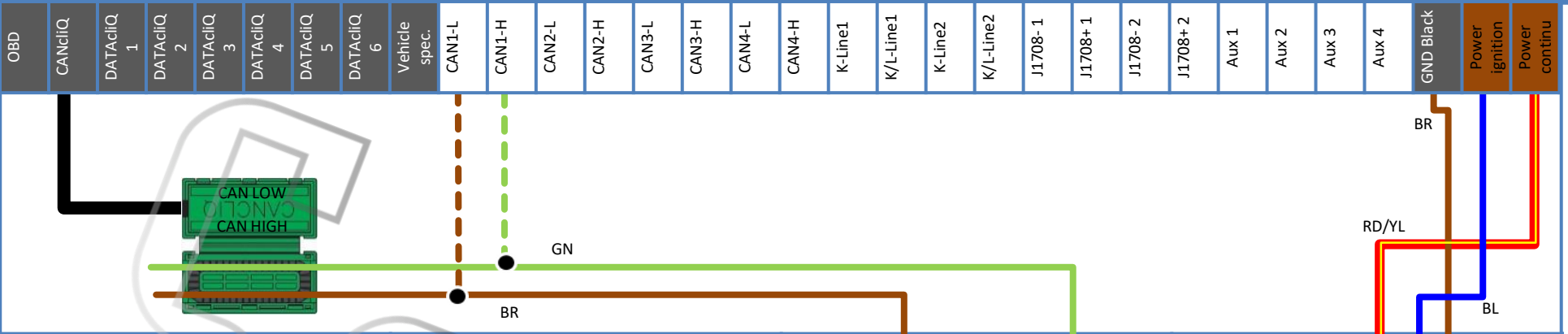

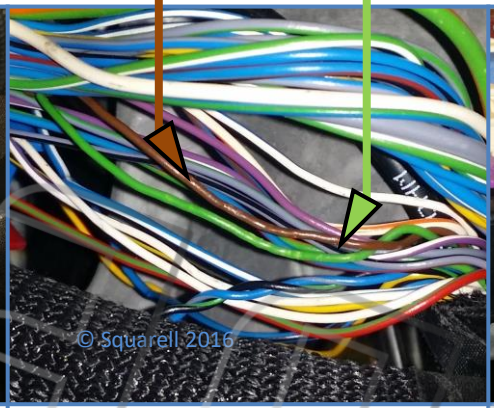

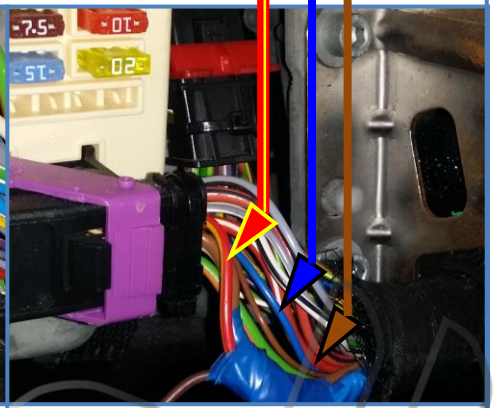

Location

Remove the plastic dashboard pocket with 3 screws.

CANbus

The CAN wires are located in the Brown connector with the Purple clip.

CANbus

Untwist the Green & Brown wires.

Place Green wire in CAN_High Slot.
Place Brown wire in CAN_Low slot.

Close CANcliQ.

Power + Ground

Power and ground are located in the Black connector with Purple clip.

Ground (KL31)
Brown Wire (Brown arrow)

Continuous Power (KL30)
Red/Yellow wire (Red/Yellow arrow).

Power on Ignition (KL15)
Blue wire (Blue arrow).

Warning! CANcliQ or DatacliQ closes only once. Please repower the Squarell Device after the installation is completed. Please connect Squarell devices to a 10V to 30V power supply. Please use certified crimping tools to connect the wires.

Fiat Bravo (typ 198) 2008 – 2014

A B C D E F G H I J K L M N O P Q R S T U V W X Y Z

Copyright © Squarell 2016

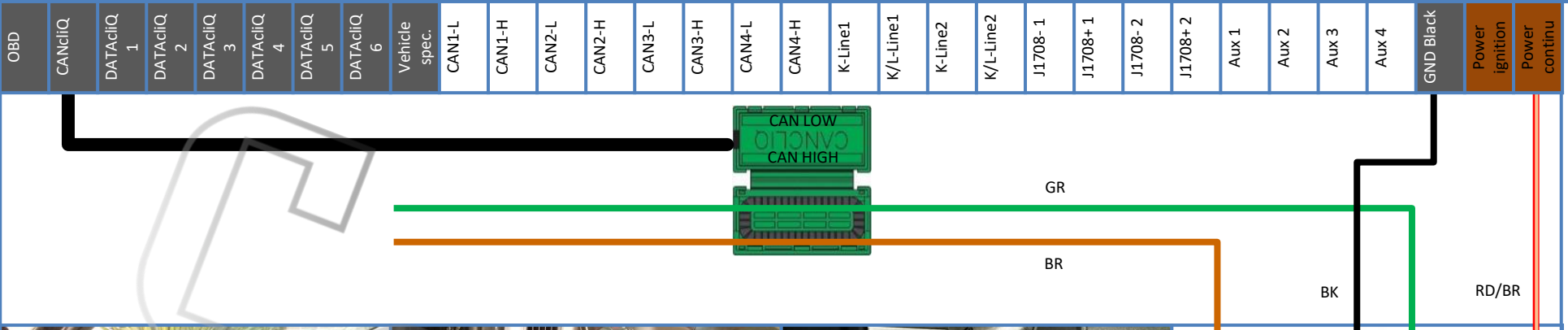

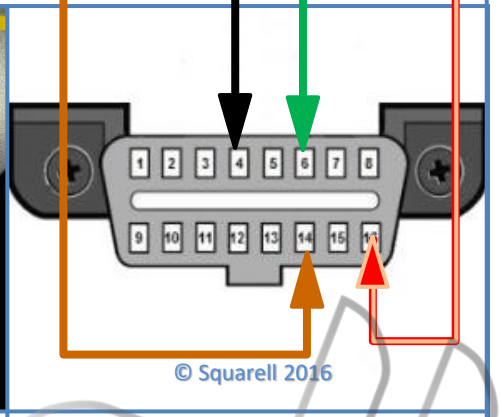

Location

Find the OBD connector at the driver side.
Located behind the left dashboard cover.

Remove the left dashboard cover to find the OBD connector.
Remove the OBD connector from the clips to get access.

CANbus

Untwist the pin 6 Green and pin 14 Brown wires.

Place the Green wire pin 6 in the CAN High Slot.
Place the Brown wire pin 14 in the CAN Low slot.
Close CANcliQ.

Power + Ground
Connections in OBD Connector

Ground (KL31) :
OBD connector Black wire pin 4 and pin 5

Continuous Power (KL30) :
Pin 16 Red/Brown OBD connector

Warning! CANcliQ or DatacliQ closes only once. Please repower the Squarell Device after the installation is completed. Please connect Squarell devices to a 10V to 30V power supply. Please use certified crimping tools to connect the wires.

Fiat Panda (typ 319) 2011 +

A B C D E F G H I J K L M N O P Q R S T U V W X Y Z

Copyright © Squarell 2016

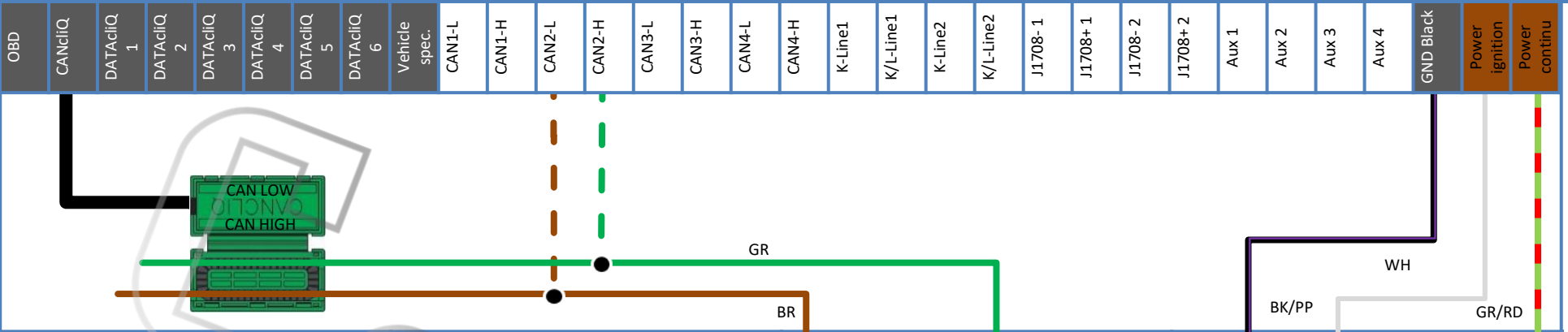

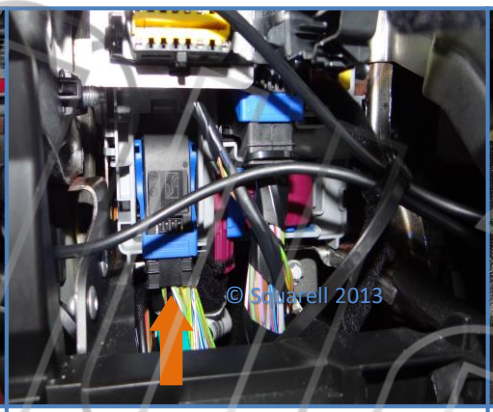

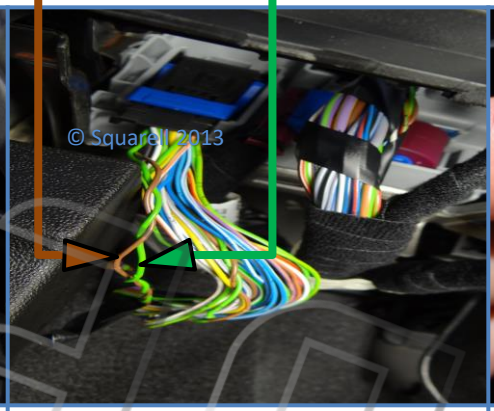

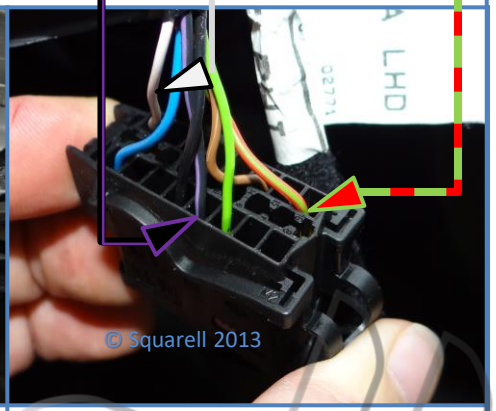

Location

At Driver side,
Remove the Dashboard cap (orange arrow)

Find the black connector with blue clip just below the OBD connector and disconnect it (orange arrow)

CANbus

Untwist the Green and Brown wires.

Place the Green wire in the CAN High slot.
Place the Brown wire in the CAN Low slot.
Close the CANcliQ.

Power + Ground

Ground (KL31) :
OBD Connector pin 4 & 5 (Black arrow)

Continuous Power (KL30) :
OBD Connector pin 16 (Red /Green arrow)

Power on Ignition (KL15) :
OBD Connector pin 9 (White arrow)

Warning! CANcliQ closes only once. Please connect Squarell devices to a 10V to 48V power supply. Please use certified crimping tools to connect the wires.

Fiat Punto evo (typ 199) 2009 - 2012

A B C D E F G H I J K L M N O P Q R S T U V W X Y Z

Copyright © Squarell 2013

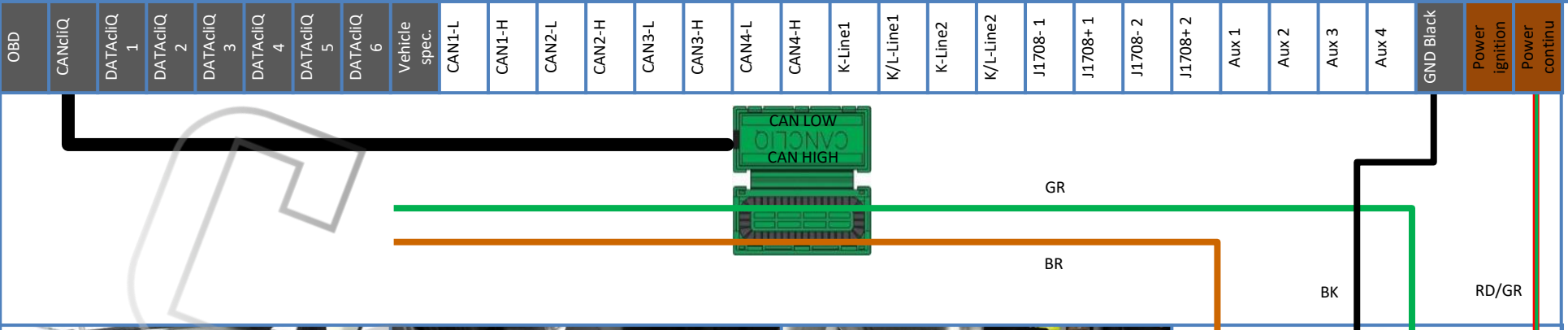

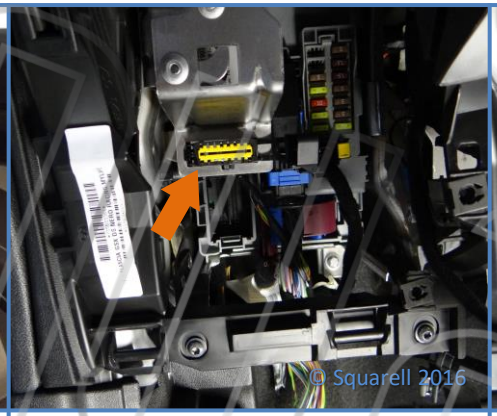

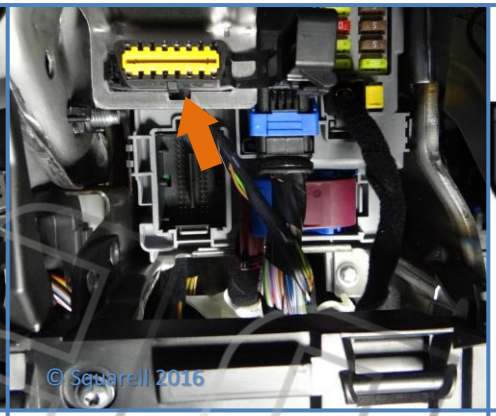

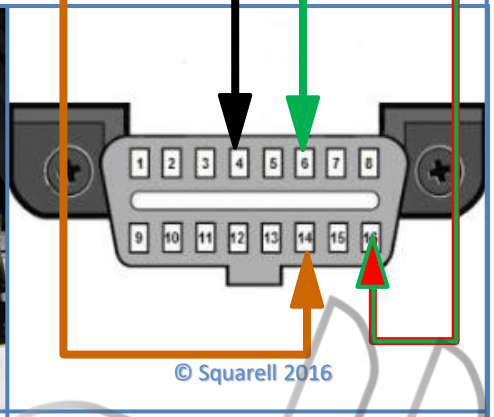

Location

Find the OBD connector at the driver side.
Located behind the left dashboard cover.

Remove the left dashboard cover to find the OBD connector.
Remove the OBD connector from the clips to get access.

CANbus

Untwist the pin 6 Green and pin 14 Brown wires.

Place the Green wire pin 6 in the CAN High Slot.
Place the Brown wire pin 14 in the CAN Low slot.
Close CANcliQ.

Power + Ground
Connections in OBD Connector

Ground (KL31) :
OBD connector Black wire pin 4 and pin 5

Continuous Power (KL30) :
Pin 16 Red/Green OBD connector

Warning! CANcliQ or DatacliQ closes only once. Please repower the Squarell Device after the installation is completed. Please connect Squarell devices to a 10V to 30V power supply. Please use certified crimping tools to connect the wires.

Fiat Punto (typ 199) 2012 +

A B C D E F G H I J K L M N O P Q R S T U V W X Y Z

Copyright © Squarell 2016

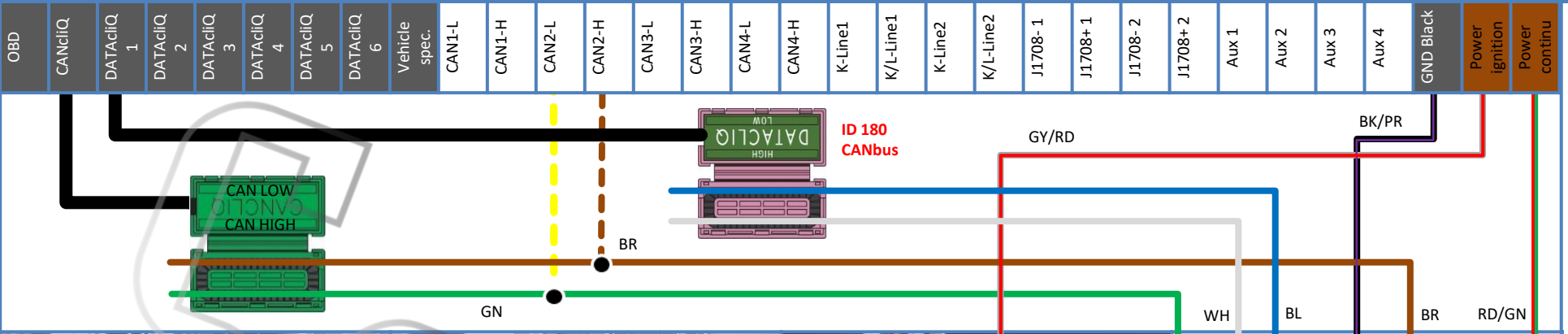

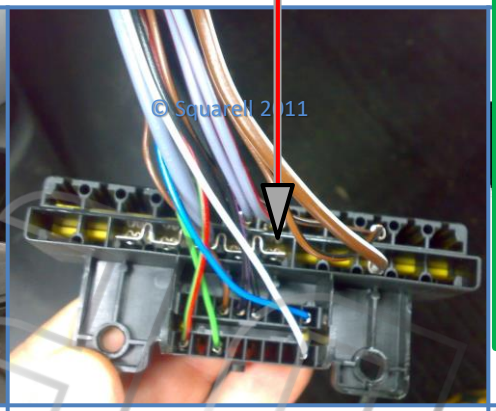

Location

At Driver side,
Remove the dashboard cap under the Steering Wheel.

Find the OBD Connector (Orange arrow).
Disconnect the OBD connector from its place.

CANbus

Untwist wires at backside of the OBD connector (pin 6 & 14)
Place Brown wire in CAN High
Place Green wire in CAN Low
Close CANcliQ.

DatacliQ (CANbus)

Untwist wires at backside of the OBD connector (pin 1 & 9)
Place Blue wire in CAN High
Place White wire in CAN Low
Close DatacliQ.

Power + Ground

Connections at backside of the OBD connector.

Ground (KL31) :
OBD Connector pin 4 and pin 5 (Black/Purple arrow)

Continuous Power (KL30) :
OBD Connector pin 16 (Red/Green arrow)

Power on Ignition (KL15) :
Free Terminal (Grey/Red arrow)

Warning! CANcliQ or DatacliQ closes only once. Please repower the Squarell Device after the installation is completed. Please connect Squarell devices to a 10V to 48V power supply. Please use certified crimping tools to connect the wires.

Fiat Qubo (3rd gen) 2006 +

A B C D E F G H I J K L M N O P Q R S T U V W X Y Z

Copyright © Squarell 2013

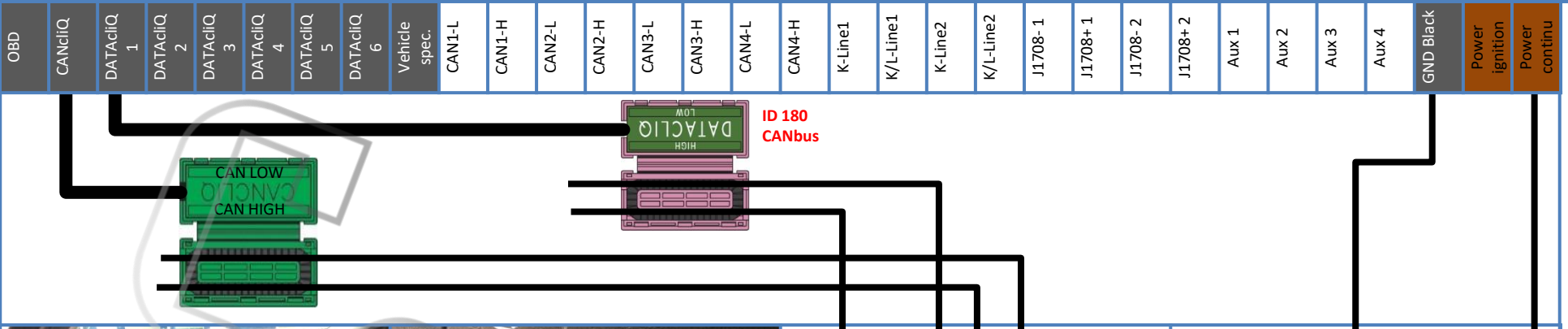

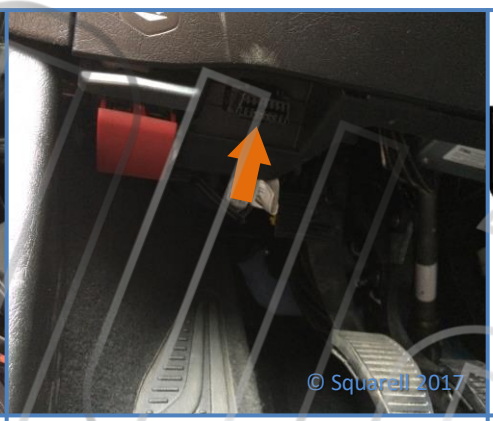

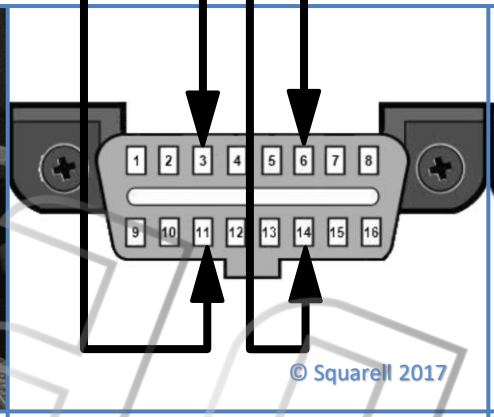

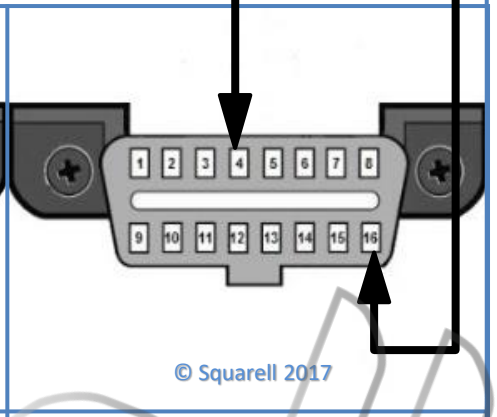

Location

Find the OBD connector at the driver side.
Located underneath the dashboard on the left side.
Remove the OBD connector from the clips to gain access.

CANcliQ

Untwist the pin 6 and pin 14 wires.

Place the wire from pin 6 in the CAN High Slot.
Place the wire from pin 14 in the CAN Low slot.
Close CANcliQ.

DatacliQ ID 180

Untwist the pin 3 and pin 11 wires.

Place the wire from pin 3 in the CAN High Slot.
Place the wire from pin 11 in the CAN Low slot.
Close DatacliQ.

Power + Ground
Connections in OBD connector

Ground (KL31) :
OBD connector pin 4 wire and pin 5

Continuous Power (KL30) :
OBD connector pin 16 wire.

Warning! CANcliQ or DatacliQ closes only once. Please repower the Squarell Device after the installation is completed. Please connect Squarell devices to a 10V to 30V power supply. Please use certified crimping tools to connect the wires.

Fiat Tipo (typ 356, 357, 358) 2015+

A B C D E F G H I J K L M N O P Q R S T U V W X Y Z

Copyright © Squarell 2016

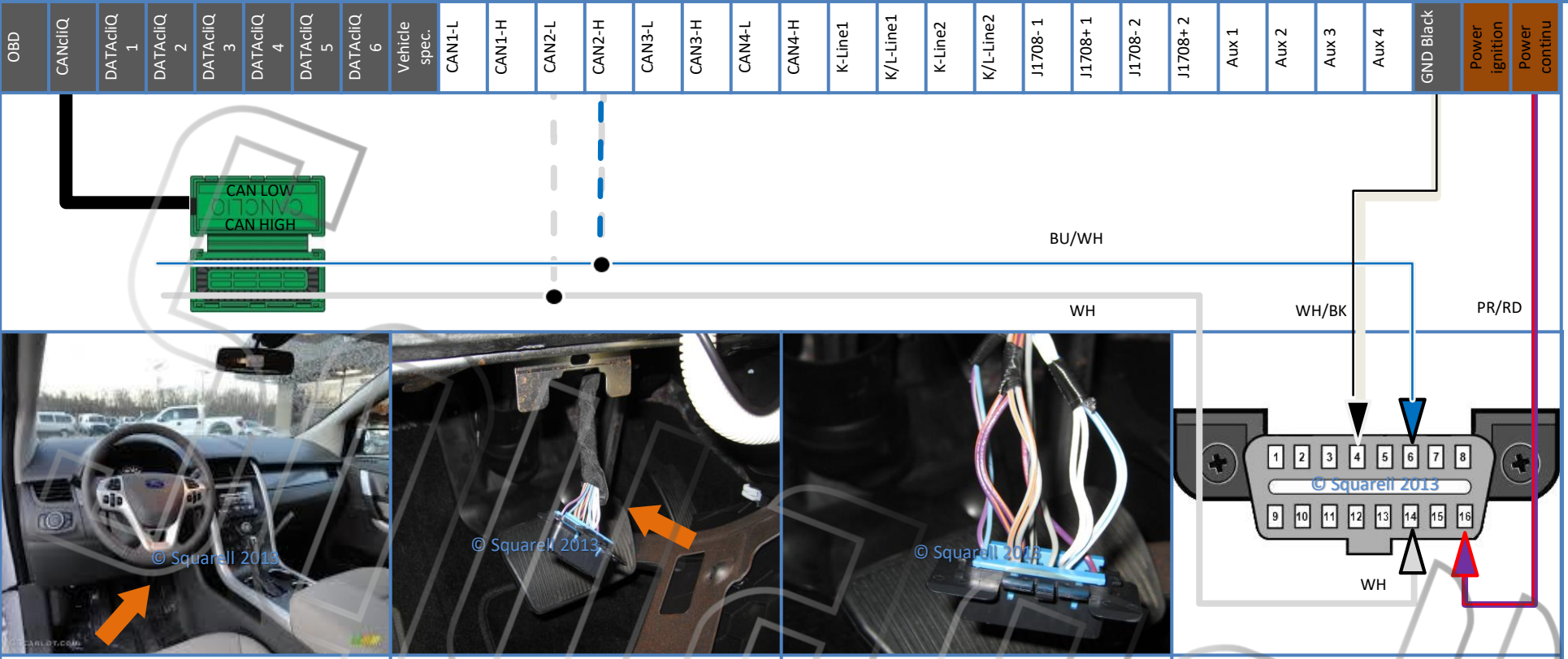

Location

Remove the Dashboard cap (orang arrow).

Location

Find the OBD Connector and disconnect it from its socket (orange arrow).

CANbus

Untwist wires on OBD Connector pin 6 & 14.
Place White/Blue wire in CAN High.
Place White wire in CAN Low.
Close CANcliQ.

Power + Ground

Connections at backside of the OBD Connector.

Ground (KL31) :
OBD Connector pin 4 & 5 (White/black wire)

Continuous Power (KL30) :
OBD Connector pin 16 (Purple/red wire)

Warning! CANcliQ closes only once. Please connect Squarell devices to a 10V to 48V power supply. Please use certified crimping tools to connect the wires.

Ford US Edge (MK1 facelift) 2011 - 2014

A B C D E F G H I J K L M N O P Q R S T U V W X Y Z

Copyright © Squarell 2013

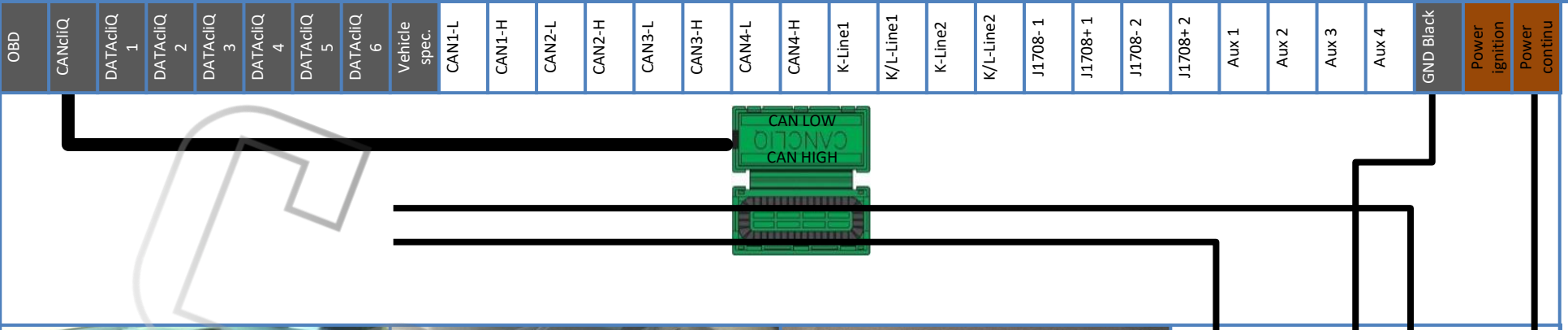

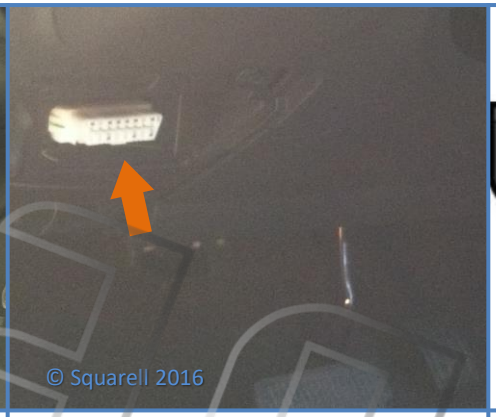

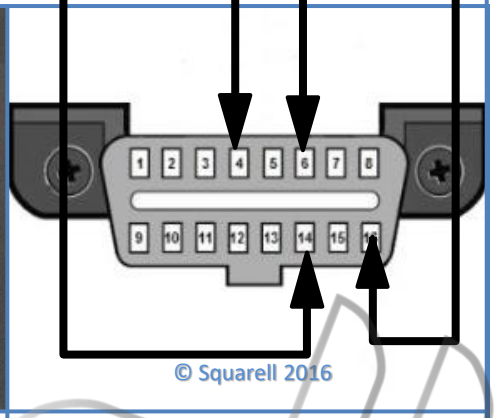

Location

Find the OBD connector at the driver side.
Located behind the left dashboard cover.

Remove the left dashboard cover to find the OBD connector.
Remove the OBD connector from the clips to get access.

CANbus

Untwist the pin 6 and 14 wires.

Place the wire of pin 6 in the CAN High Slot.
Place the wire of pin 14 in the CAN Low slot.
Close CANcliQ.

Power + Ground
Connections in OBD Connector

Ground (KL31) :
OBD connector pin 4 and pin 5

Continuous Power (KL30) :
Pin 16 OBD connector

Warning! CANcliQ or DatacliQ closes only once. Please repower the Squarell Device after the installation is completed. Please connect Squarell devices to a 10V to 30V power supply. Please use certified crimping tools to connect the wires.

Ford US Escape (MK3) 2013-2019

A B C D E F G H I J K L M N O P Q R S T U V W X Y Z

Copyright © Squarell 2016

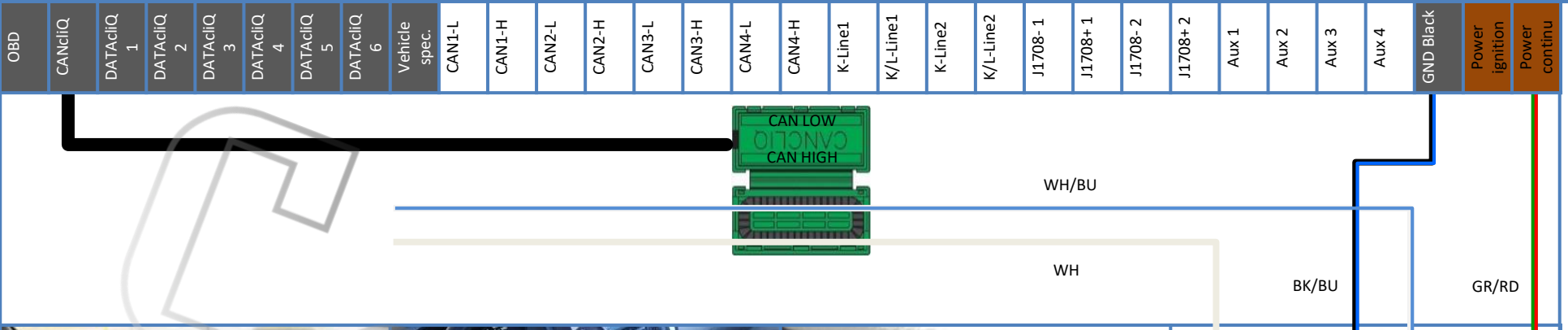

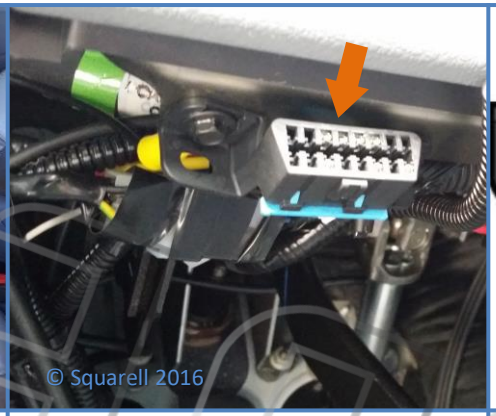

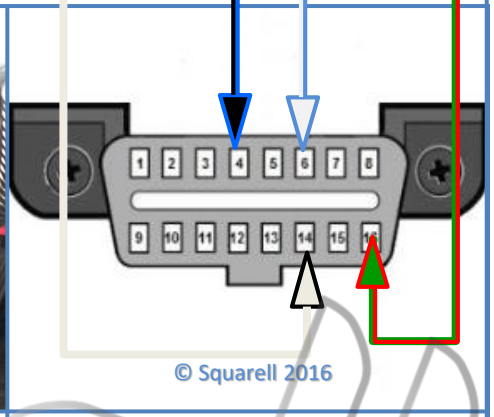

Location

Find the OBD connector at the driver side.
Located underneath the dashboard.

Remove the left dashboard cover to find the OBD connector.
Remove the OBD connector from the clips to get access.

CANbus

Untwist the pin 6 White/Blue and pin 14 White wires.

Place the White/Blue wire of pin 6 in the CAN High Slot.
Place the White wire of pin 14 in the CAN Low slot.
Close CANcliQ.

Power + Ground
Connections in OBD Connector

Ground (KL31) :
OBD connector pin 4 Black/Blue wire and pin 5

Continuous Power (KL30) :
Pin 16 Green/Red wire OBD connector

Warning! CANcliQ or DatacliQ closes only once. Please repower the Squarell Device after the installation is completed. Please connect Squarell devices to a 10V to 30V power supply. Please use certified crimping tools to connect the wires.

Ford US Explorer (MK5) 2011-2019

A B C D E F G H I J K L M N O P Q R S T U V W X Y Z

Copyright © Squarell 2016

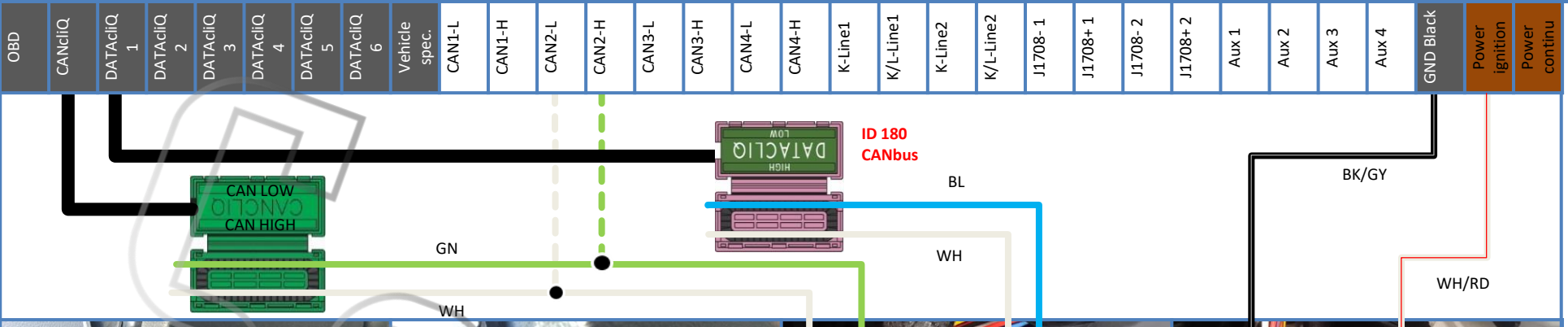

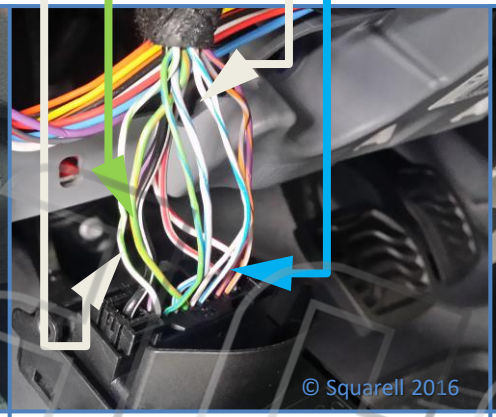

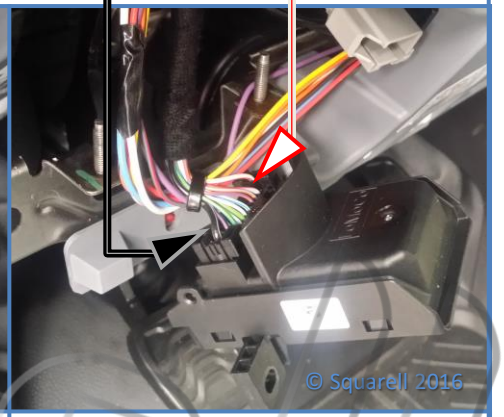

Location

Remove lower, middle and side dashboard covers at drivers side to come to the OBD.

The connector at the backside of the OBD contains the CANbus lines.

Untwist the White (pin 15) and Green (pin 16) wires.
Place the White wire (pin 15) in the CAN Low slot.
Place the Green wire (pin 16) in the CAN High slot.
Close the CANcliQ.

Untwist the White (pin 19) and Blue (pin 20) wires.
Place the White wire (pin 19) in the CAN Low Slot.
Place the Blue wire (pin 20) in the CAN High slot.
Close the DataCliQ (ID180).

Power + Ground
OBD backside connector

Ground (KL31) :
Pin 1 Black/Grey Wire

Power on ignition (KL15) :
Pin 13 White/Red wire.

Warning! CANcliQ or DatacliQ closes only once. Please repower the Squarell Device after the installation is completed. Please connect Squarell devices to a 10V to 30V power supply. Please use certified crimping tools to connect the wires.

Ford US Fusion (MK2) 2013 +

A B C D E F G H I J K L M N O P Q R S T U V W X Y Z

Copyright © Squarell 2016

OBD	CANcliQ	DATAcliQ 1	DATAcliQ 2	DATAcliQ 3	DATAcliQ 4	DATAcliQ 5	DATAcliQ 6	Vehicle spec.	CAN1-L	CAN1-H	CAN2-L	CAN2-H	CAN3-L	CAN3-H	CAN4-L	CAN4-H	K-Line1	K/L-Line1	K-Line2	K/L-Line2	J1708- 1	J1708+ 1	J1708- 2	J1708+ 2	Aux 1	Aux 2	Aux 3	Aux 4	GND Black	Power ignition	Power continu

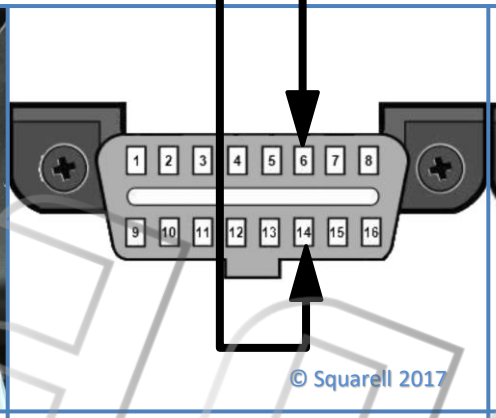

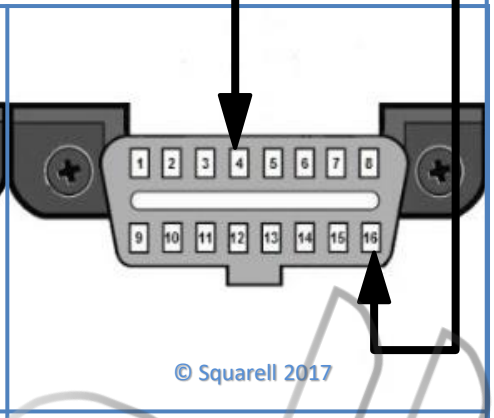

Location

Find the OBD connector at the driver side. Located behind the hand glove compartment on the left side.

Remove the OBD connector from the clips to get access.

CANbus

Untwist the pin 6 and pin 14 wires.

Place the wire from pin 6 in the CAN High Slot.
Place the wire from pin 14 in the CAN Low slot.
Close CANcliQ.

Power + Ground
Connections in OBD connector

Ground (KL31) :
OBD connector pin 4 wire and pin 5

Continuous Power (KL30) :
Pin 16 wire OBD connector

Warning! CANcliQ or DatacliQ closes only once. Please repower the Squarell Device after the installation is completed. Please connect Squarell devices to a 10V to 30V power supply. Please use certified crimping tools to connect the wires.

Ford B-Max (JK) 2012-2017

A B C D E F G H I J K L M N O P Q R S T U V W X Y Z

Copyright © Squarell 2016

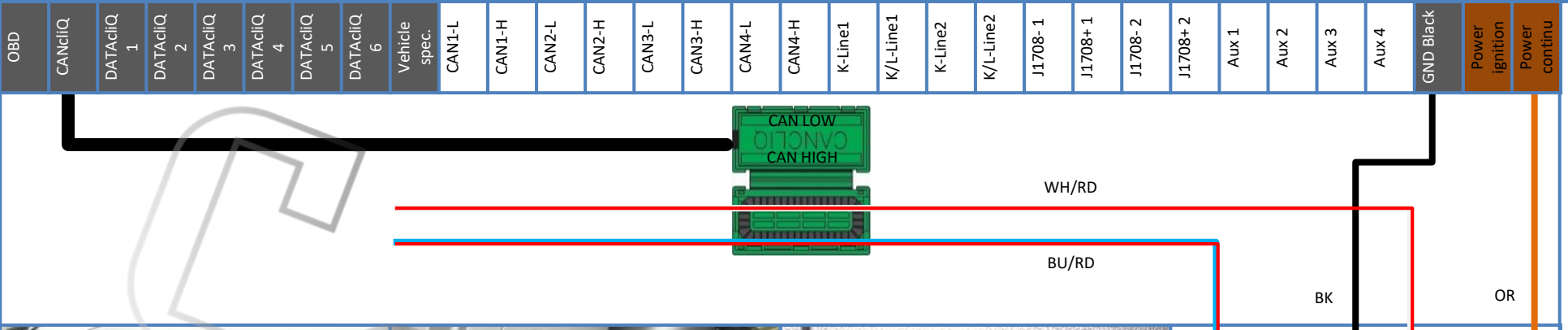

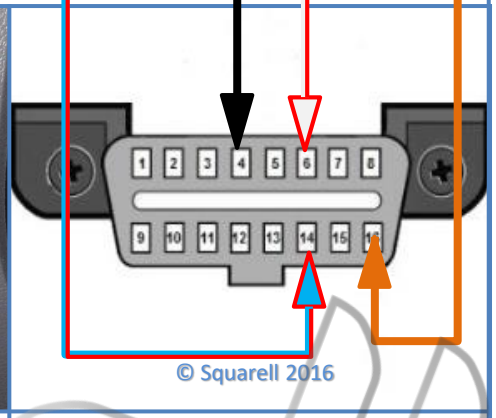

Location

Find the OBD connector at the driver side.
Located underneath the dashboard.

Remove the OBD connector from the clips to get access.

CANbus

Untwist the pin 6 White/Red and pin 14 Blue/Red wires.

Place the White/Red wire pin 6 in the CAN High Slot.
Place the Blue/Red wire pin 14 in the CAN Low slot.
Close CANcliQ.

Power + Ground
Connections in OBD Connector

Ground (KL31) :
OBD connector pin 4 Black wire and pin 5

Continuous Power (KL30) :
Pin 16 Orange wire OBD connector

Warning! CANcliQ or DatacliQ closes only once. Please repower the Squarell Device after the installation is completed. Please connect Squarell devices to a 10V to 30V power supply. Please use certified crimping tools to connect the wires.

Ford C-Max (DM2) 2009 - 2011

Copyright © Squarell 2016

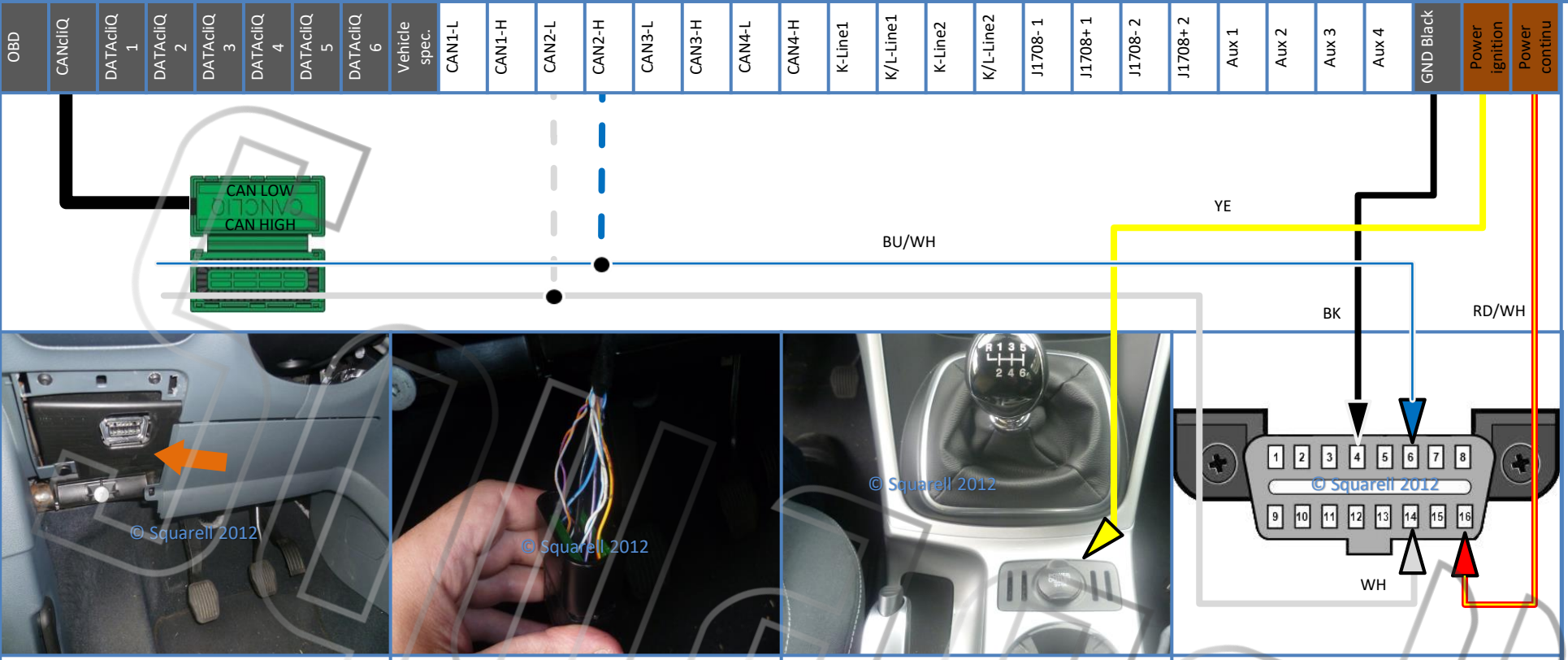

Location

At Driver side,
Remove the Dashboard cap
Find the OBD Connector and disconnect it (orange arrow)

CANbus

Untwist wires on OBD Connector pin 6 & 14
Place White/Blue wire in CAN High
Place White Brown wire in CAN Low
Close CANcliQ.

Power + Ground

Connections at backside of the Radio or middle console.

Power on Ignition (KL15) :
Radio ISO connector pin 7 or behind Power output connector (Yellow arrow).

Power + Ground

Connections at backside of the OBD Connector.

Ground (KL31) :
OBD Connector pin 4 & 5 (Black arrow)

Continuous Power (KL30) :
OBD Connector pin 16 (Red/Yellow arrow)

Warning! CANcliQ closes only once. Please connect Squarell devices to a 10V to 48V power supply. Please use certified crimping tools to connect the wires.

Ford C-Max (DXA) 2011-2017

A B C D E F G H I J K L M N O P Q R S T U V W X Y Z

Copyright © Squarell 2012

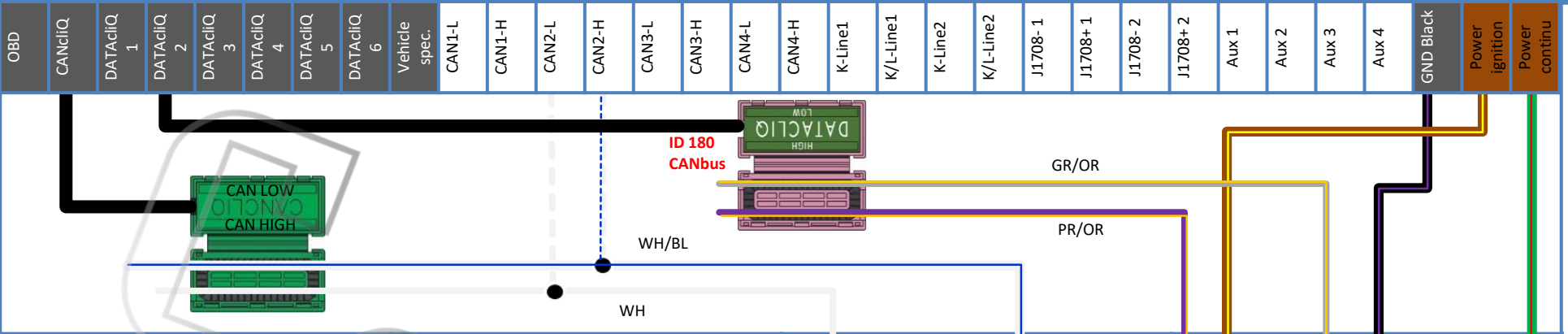

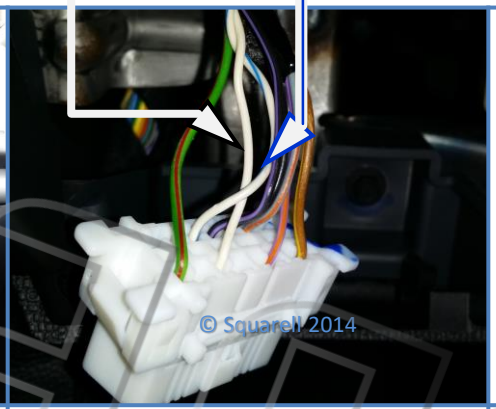

Location

Find the OBD connector at the left side dashboard cover under the steering wheel.

Location OBD connector.

CANbus

Untwist white wires from the OBD socket. (pin 6 & 14)
Place White wire with the blue tracer (Pin 6) in CAN High slot.
Place White wire (Pin 14) in CAN Low slot.
Close CANcliQ properly.

Untwist Grey/Orange and Purple/Orange wires (Pin 3 & 11).
Place Grey/Orange wire in CAN High Slot.
Place Purple/Orange wire in CAN Low slot.
Close DatacliQ properly.

Power + Ground © Squarell 2014

Connections at OBD connector.

Ground (KL31)
Pin 4/5 OBD connector (Black Purple arrow).

Continuous Power (KL30)
Pin 16 OBD connector (Green Red arrow).

Power on Ignition (KL15)
Pin 9 OBD connector (Brown Yellow arrow).

Warning! CANcliQ or DatacliQ closes only once. Please repower the Squarell Device after the installation is completed. Please connect Squarell devices to a 10V to 30V power supply. Please use certified crimping tools to connect the wires.

Ford EcoSport (JK8) 2012 +

A B C D E F G H I J K L M N O P Q R S T U V W X Y Z

Copyright © Squarell 2014

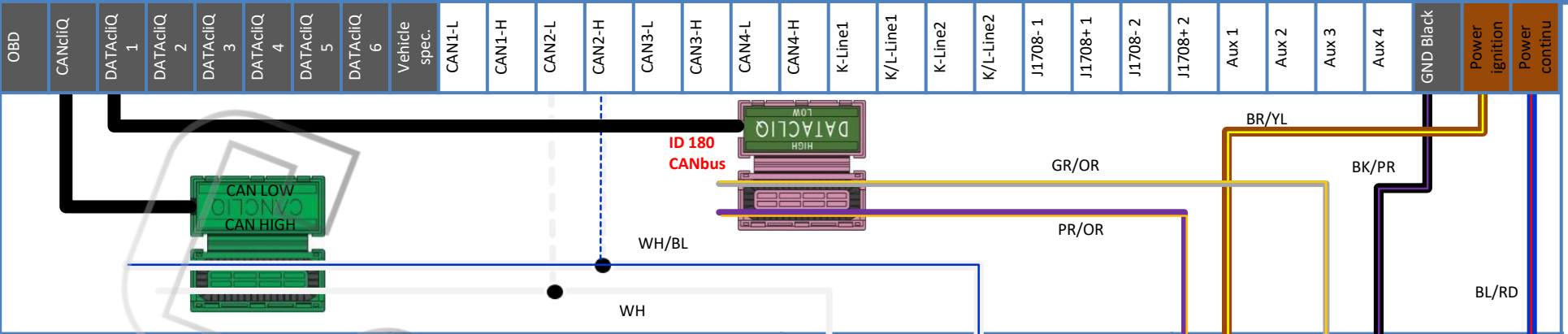

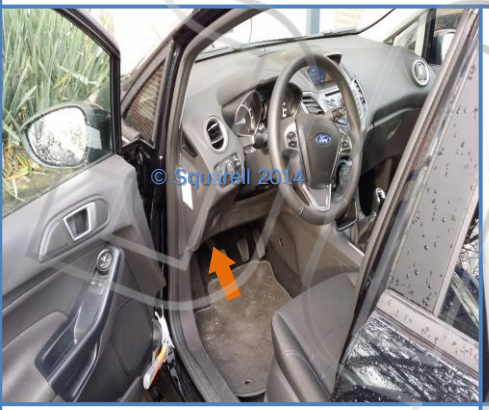

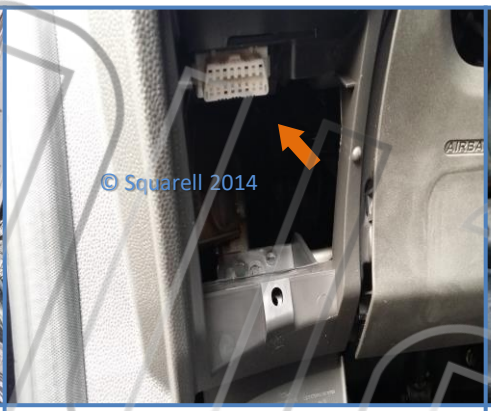

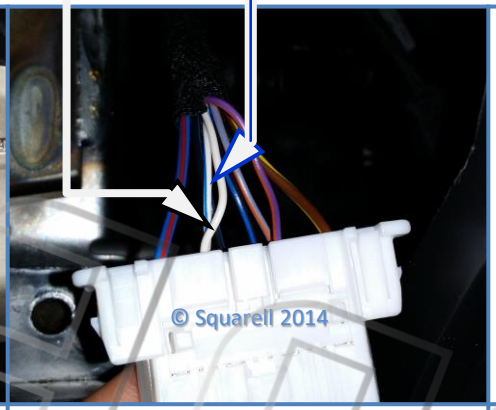

Location

Find the OBD connector at the left side dashboard cover under the steering wheel.

Location OBD connector.

CANbus

Untwist Yellow wires from the OBD socket. (pin 6 & 14)
Place White wire with the blue tracer (Pin 6) in CAN High slot.
Place White wire (Pin 14) in CAN Low slot.
Close CANcliQ properly.

Untwist Grey/Orange and Purple/Orange wires (Pin 3 & 11).
Place Grey/Orange wire in CAN High Slot.
Place Purple/Orange wire in CAN Low slot.
Close DatacliQ properly.

Power + Ground © Squarell 2014

Connections at OBD connector.

Ground (KL31)
Pin 4/5 OBD connector (Black Purple arrow).

Continuous Power (KL30)
Pin 16 OBD connector (Blue Red arrow).

Power on Ignition (KL15)
Pin 9 OBD connector (Brown Yellow arrow).

Warning! CANcliQ or DatacliQ closes only once. Please repower the Squarell Device after the installation is completed. Please connect Squarell devices to a 10V to 30V power supply. Please use certified crimping tools to connect the wires.

Ford Fiesta (JA8) 2008 – 2017

A B C D E F G H I J K L M N O P Q R S T U V W X Y Z

Copyright © Squarell 2014

OBD	CANcliQ	DATAcliQ 1	DATAcliQ 2	DATAcliQ 3	DATAcliQ 4	DATAcliQ 5	DATAcliQ 6	Vehicle spec.	CAN1-L	CAN1-H	CAN2-L	CAN2-H	CAN3-L	CAN3-H	CAN4-L	CAN4-H	K-Line1	K/L-Line1	K-Line2	K/L-Line2	J1708- 1	J1708+ 1	J1708- 2	J1708+ 2	Aux 1	Aux 2	Aux 3	Aux 4	GND Black	Power ignition	Power continu

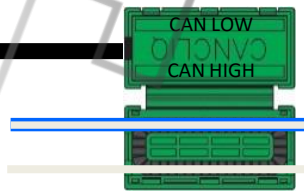

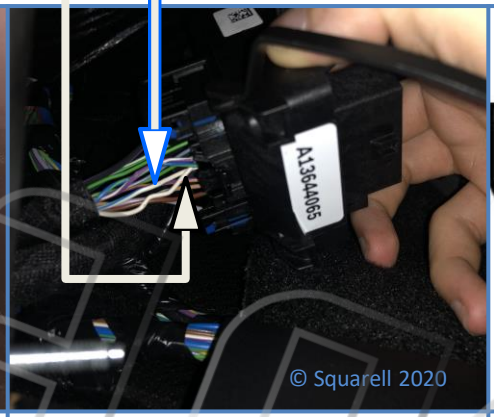

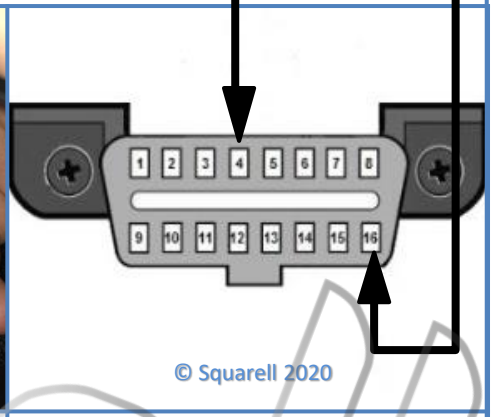

Location

The OBD can be found at the driverside below the steering column.

Remove the black OBD connector from the mount to gain access the backside of the OBD.

CANbus

Untwist the white-blue and white wires for the connection.

Place the white-blue wire in the CAN High Slot.
Place the White wire in the CAN Low slot.

Close CANcliQ.

Power + Ground
Connections in OBD connector

Ground (KL31) :
OBD connector pin 4 Black wire and pin 5

Continuous Power (KL30) :
Pin 16 White wire OBD connector

Warning! CANcliQ or DatacliQ closes only once. Please repower the Squarell Device after the installation is completed. Please connect Squarell devices to a 10V to 30V power supply. Please use certified crimping tools to connect the wires.
Note: The facelift version can be recognised from the front grill or steering wheel.

Ford Fiesta (HF/HJ) 2017+

A B C D E F G H I J K L M N O P Q R S T U V W X Y Z

Copyright © Squarell 2020

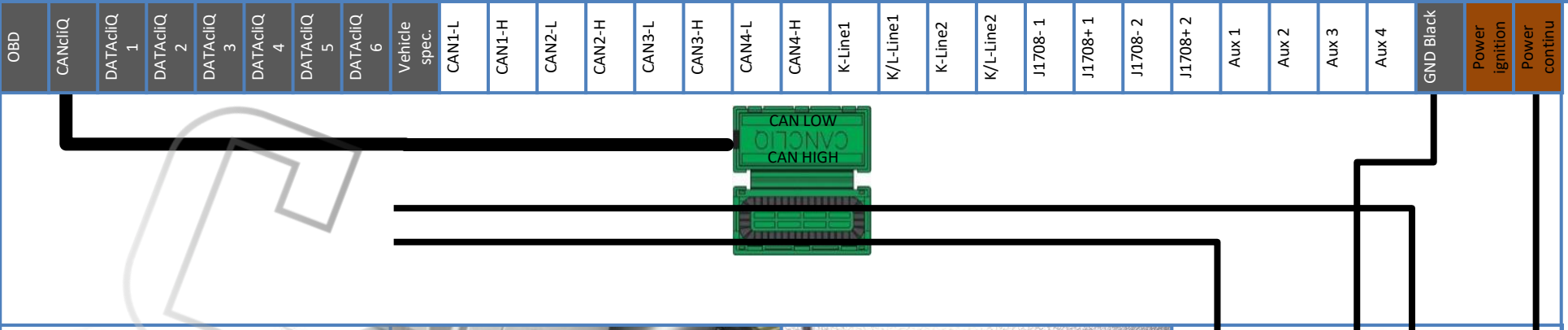

Location

Find the OBD connector at the driver side.
Located underneath the dashboard.

Remove the OBD connector from the clips to get access.

CANbus

Untwist the pin 6 and 14 wires.

Place the wire of pin 6 in the CAN High Slot.
Place the wire of pin 14 in the CAN Low slot.
Close CANcliQ.

Power + Ground
Connections in OBD Connector

Ground (KL31) :
OBD connector pin 4 and pin 5

Continuous Power (KL30) :
Pin 16 OBD connector

Warning! CANcliQ or DatacliQ closes only once. Please repower the Squarell Device after the installation is completed. Please connect Squarell devices to a 10V to 30V power supply. Please use certified crimping tools to connect the wires.

Ford Focus (DA3) 2008 - 2011

A B C D E F G H I J K L M N O P Q R S T U V W X Y Z

Copyright © Squarell 2016

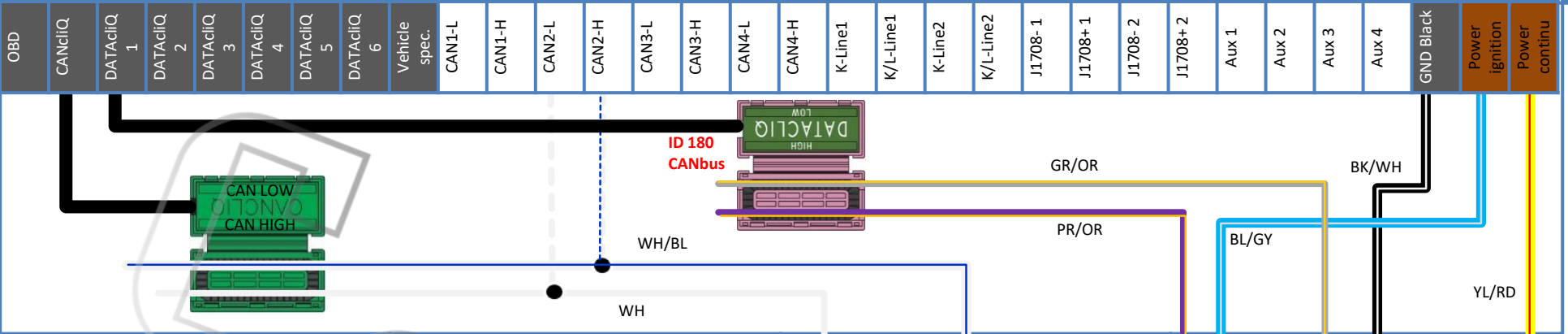

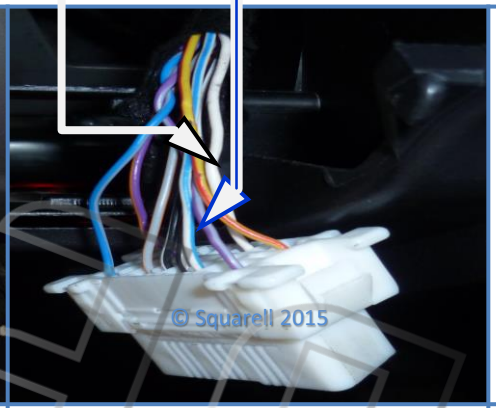

Location

Find the OBD connector at the left side dashboard cover under the steering wheel.

Location OBD connector.

CANbus

Untwist Yellow wires from the OBD socket. (pin 6 & 14)
Place White wire with the blue tracer (Pin 6) in CAN High slot.
Place White wire (Pin 14) in CAN Low slot.
Close CANcliQ properly.

Untwist Grey/Orange and Purple/Orange wires (Pin 3 & 11).
Place Grey/Orange wire in CAN High Slot.
Place Purple/Orange wire in CAN Low slot.
Close DatacliQ properly.

Power + Ground

© Squarell 2014

Connections at OBD connector.

Ground (KL31)
Pin 4/5 OBD connector (Black White arrow).

Continuous Power (KL30)
Pin 16 OBD connector (Yellow Red arrow).

Power on Ignition (KL15)
Pin 9 OBD connector (Blue Grey arrow).

Warning! CANcliQ or DatacliQ closes only once. Please repower the Squarell Device after the installation is completed. Please connect Squarell devices to a 10V to 30V power supply. Please use certified crimping tools to connect the wires.

Ford Focus (DYB) 2010-2018

Copyright © Squarell 2015

OBD	CANcliQ	DATAcliQ 1	DATAcliQ 2	DATAcliQ 3	DATAcliQ 4	DATAcliQ 5	DATAcliQ 6	Vehicle spec.	CAN1-L	CAN1-H	CAN2-L	CAN2-H	CAN3-L	CAN3-H	CAN4-L	CAN4-H	K-Line1	K/L-Line1	K-Line2	K/L-Line2	J1708- 1	J1708+ 1	J1708- 2	J1708+ 2	Aux 1	Aux 2	Aux 3	Aux 4	GND Black	Power ignition	Power continu

Location

The OBD can be found at the driverside below the steering column.

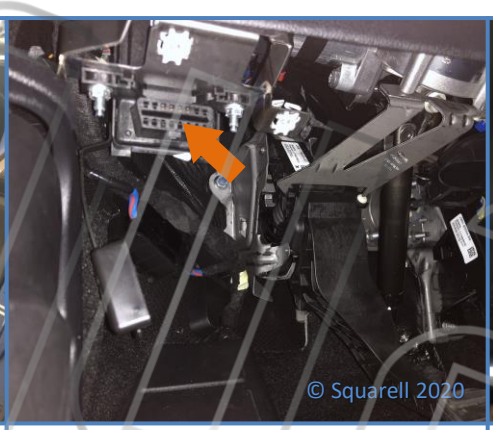

Remove the black OBD connector from the mount to gain access the backside of the OBD.

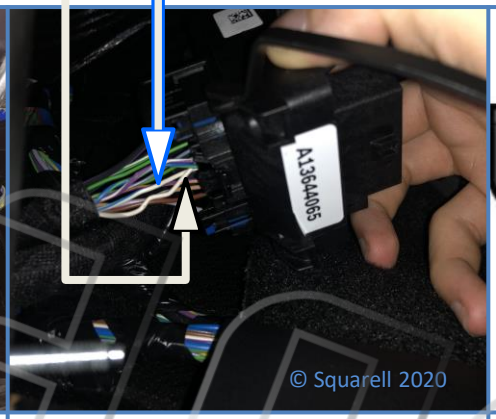

CANbus

Untwist the white-blue and white wires for the connection.

Place the white-blue wire in the CAN High Slot.
Place the White wire in the CAN Low slot.

Close CANcliQ.

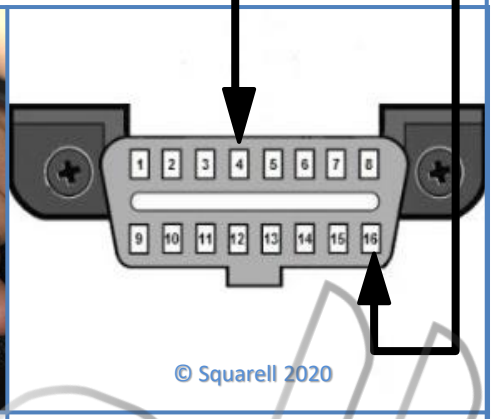

Power + Ground
Connections in OBD connector

Ground (KL31) :
OBD connector pin 4 Black wire and pin 5

Continuous Power (KL30) :
Pin 16 White wire OBD connector

Warning! CANcliQ or DatacliQ closes only once. Please repower the Squarell Device after the installation is completed. Please connect Squarell devices to a 10V to 30V power supply. Please use certified crimping tools to connect the wires.
Note: The facelift version can be recognised from the front grill or steering wheel.

Ford Focus (4th gen) 2018+

A B C D E F G H I J K L M N O P Q R S T U V W X Y Z

Copyright © Squarell 2020

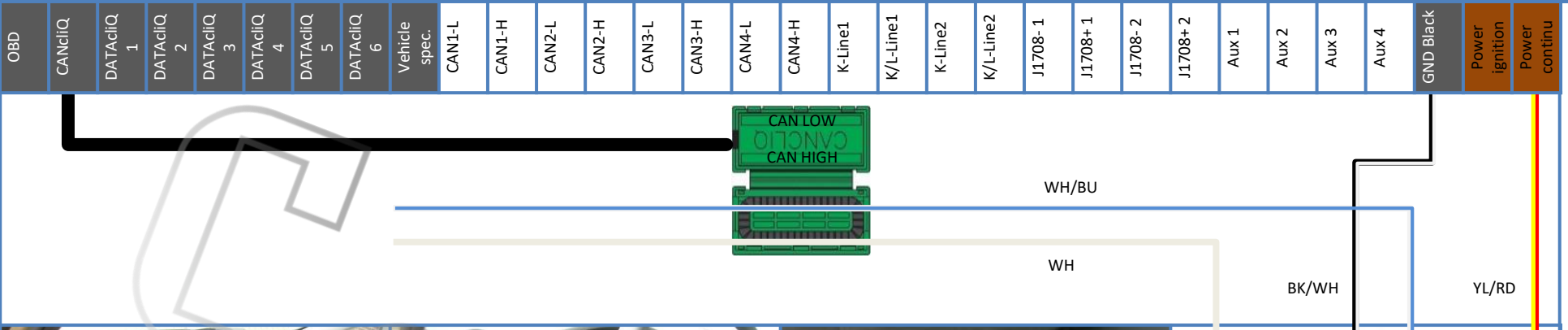

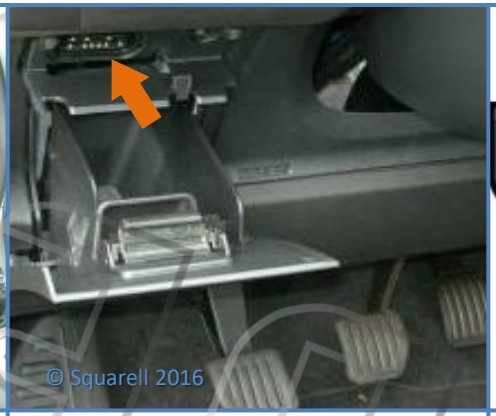

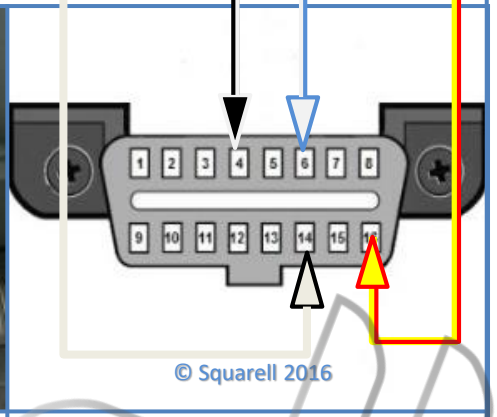

Location

Find the OBD connector at the driver side. Located behind the left dashboard glove box.

Open up the left dashboard cover to find the OBD connector.
Remove the OBD connector from the clips to get access.

CANbus

Untwist the pin 6 White/Blue and pin 14 White wires.

Place the White/Blue wire pin 6 in the CAN High Slot.
Place the White wire pin 14 in the CAN Low slot.
Close CANcliQ.

Power + Ground
Connections in OBD Connector

Ground (KL31) :
OBD connector pin 4 and pin 5

Continuous Power (KL30) :
Pin 16 OBD connector

Warning! CANcliQ or DatacliQ closes only once. Please repower the Squarell Device after the installation is completed. Please connect Squarell devices to a 10V to 30V power supply. Please use certified crimping tools to connect the wires.

Ford Galaxy (MK2) 2006 - 2015

A B C D E F G H I J K L M N O P Q R S T U V W X Y Z

Copyright © Squarell 2016

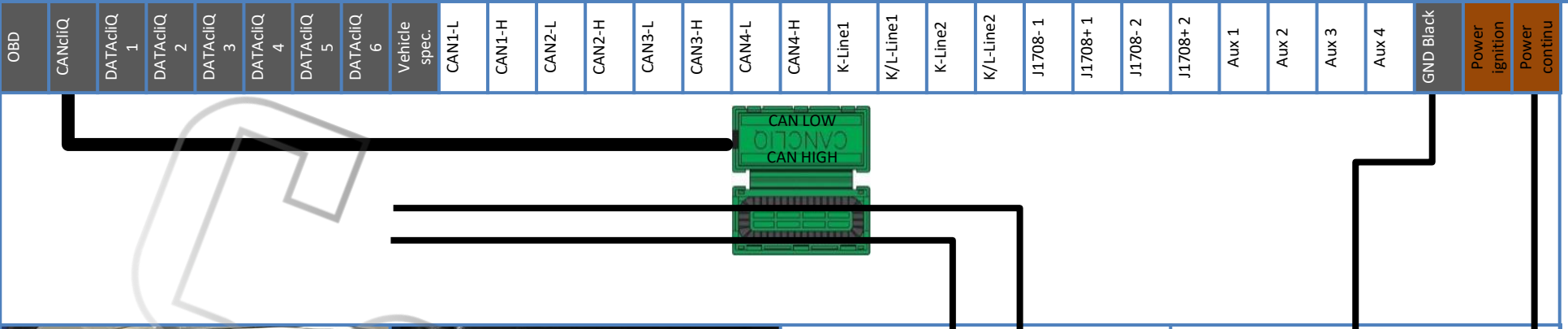

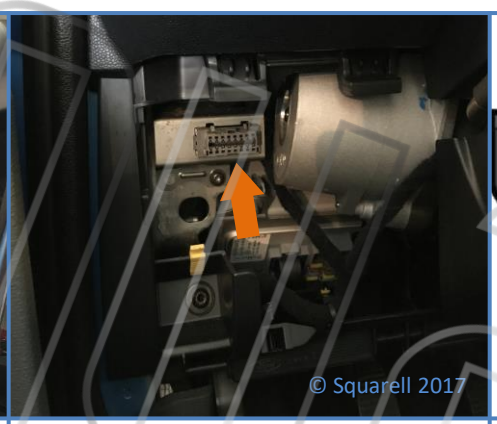

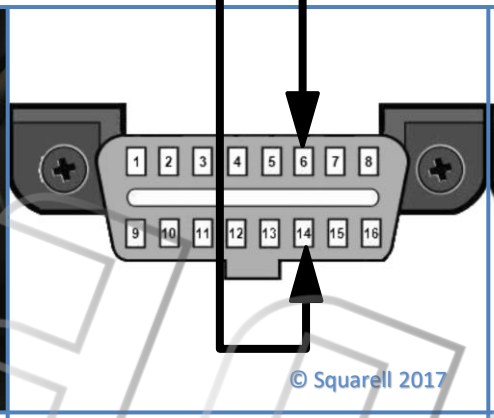

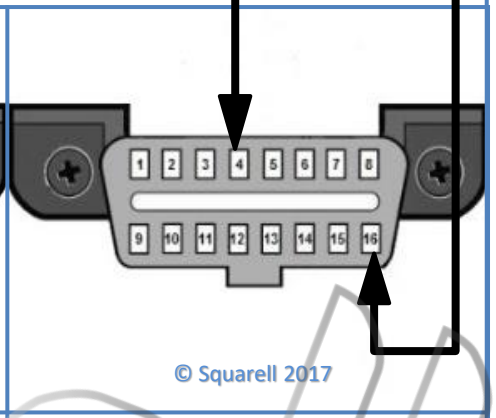

Location

Find the OBD connector at the driver side. Located behind the lower dashboard cover on the left side.

Remove the lower dashboard cover. Remove the OBD connector from the clips to get access.

CANbus

Untwist the pin 6 and pin 14 wires.

Place the wire from pin 6 in the CAN High Slot.
Place the wire from pin 14 in the CAN Low slot.
Close CANcliQ.

Power + Ground
Connections in OBD connector

Ground (KL31) :
OBD connector pin 4 wire and pin 5

Continuous Power (KL30) :
Pin 16 wire OBD connector

Warning! CANcliQ or DatacliQ closes only once. Please repower the Squarell Device after the installation is completed. Please connect Squarell devices to a 10V to 30V power supply. Please use certified crimping tools to connect the wires.

Ford Ka (MK2) 2009-2016

A B C D E F G H I J K L M N O P Q R S T U V W X Y Z

Copyright © Squarell 2016

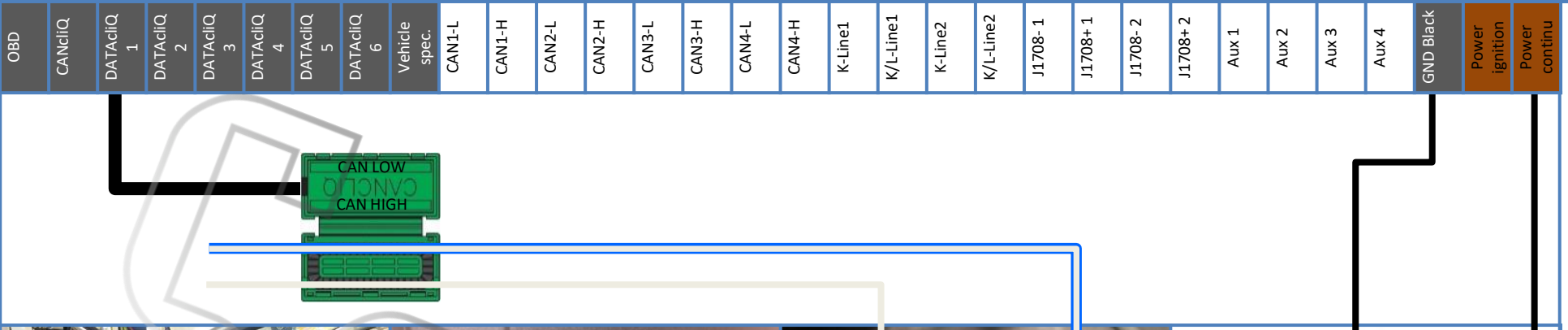

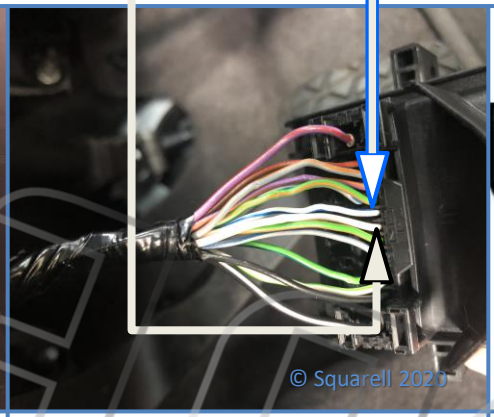

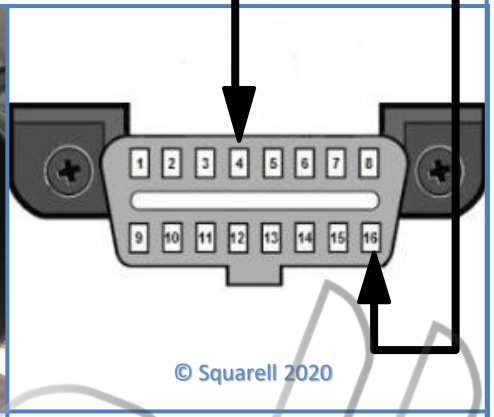

Location

The OBD can be found at the driverside below the steering column.

Remove the black OBD connector from the mount to gain access the backside of the OBD.

CANbus

Untwist the white-blue and white wires for the connection.

Place the white-blue wire in the CAN High Slot.
Place the White wire in the CAN Low slot.

Close CANcliQ.

Power + Ground
Connections in OBD connector

Ground (KL31) :
OBD connector pin 4 Black wire and pin 5

Continuous Power (KL30) :
Pin 16 White wire OBD connector

Warning! CANcliQ or DatacliQ closes only once. Please repower the Squarell Device after the installation is completed. Please connect Squarell devices to a 10V to 30V power supply. Please use certified crimping tools to connect the wires.
Note: The facelift version can be recognised from the front grill or steering wheel.

Ford ka+ (MK3) 2017+

A B C D E F G H I J K L M N O P Q R S T U V W X Y Z

Copyright © Squarell 2020

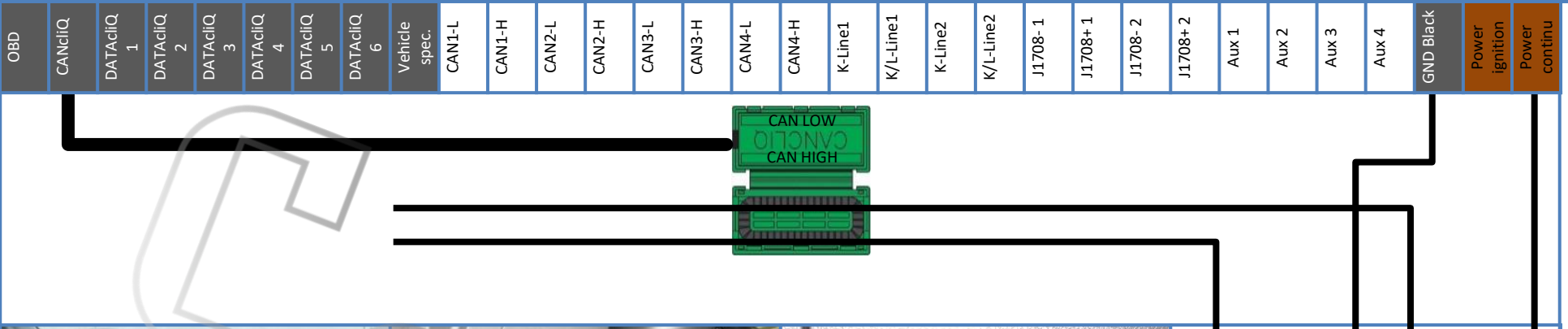

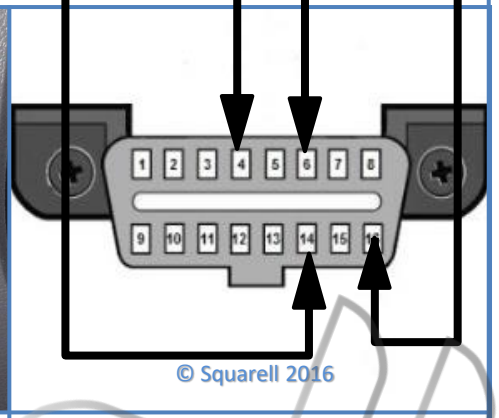

Location

Find the OBD connector at the driver side.
Located underneath the dashboard.

Remove the OBD connector from the clips to get access.

CANbus

Untwist the pin 6 and 14 wires.

Place the wire of pin 6 in the CAN High Slot.
Place the wire of pin 14 in the CAN Low slot.
Close CANcliQ.

Power + Ground
Connections in OBD Connector

Ground (KL31) :
OBD connector pin 4 and pin 5

Continuous Power (KL30) :
Pin 16 OBD connector

Warning! CANcliQ or DatacliQ closes only once. Please repower the Squarell Device after the installation is completed. Please connect Squarell devices to a 10V to 30V power supply. Please use certified crimping tools to connect the wires.

Ford Kuga (DM2) 2008 - 2012

A B C D E F G H I J K L M N O P Q R S T U V W X Y Z

Copyright © Squarell 2016

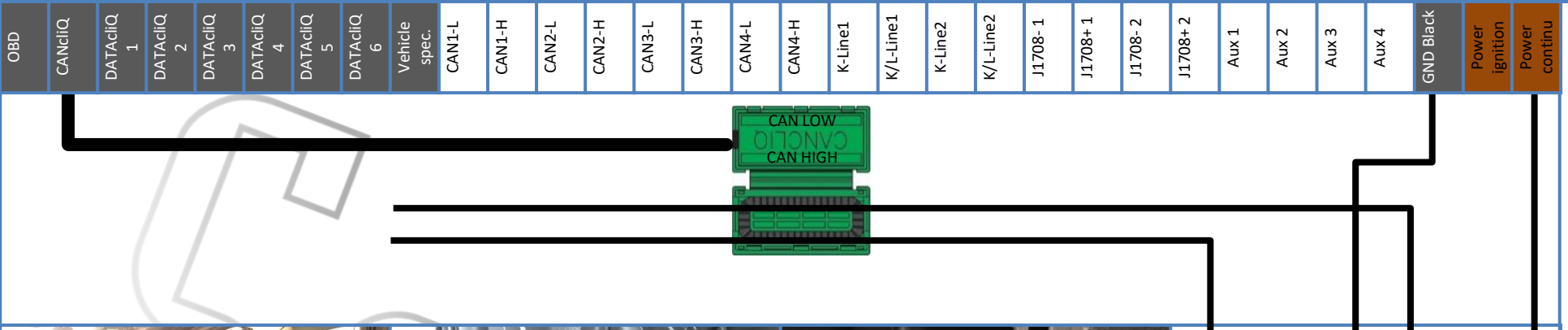

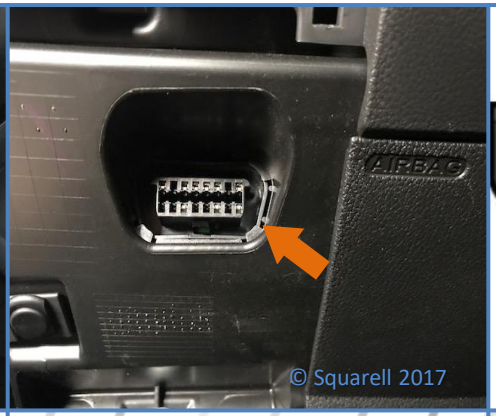

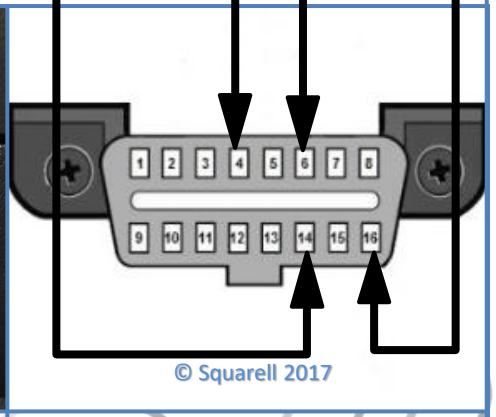

Location

Find the OBD connector at the driver side. Located underneath the dashboard on the left side.

Remove the cover to get access to the OBD connector.

CANbus

Remove the OBD connector from the clips to get access.

Untwist the pin 6 and pin 14 wires.

Place the wire from pin 6 in the CAN High Slot.
Place the wire from pin 14 in the CAN Low slot.
Close CANcliQ.

Power + Ground
Connections in OBD connector

Ground (KL31) :
OBD connector pin 4 wire and pin 5

Continuous Power (KL30) :
Pin 16 wire OBD connector

Warning! CANcliQ or DatacliQ closes only once. Please repower the Squarell Device after the installation is completed. Please connect Squarell devices to a 10V to 30V power supply. Please use certified crimping tools to connect the wires.

Ford Kuga (DM2) 2012-2019

A B C D E F G H I J K L M N O P Q R S T U V W X Y Z

Copyright © Squarell 2016

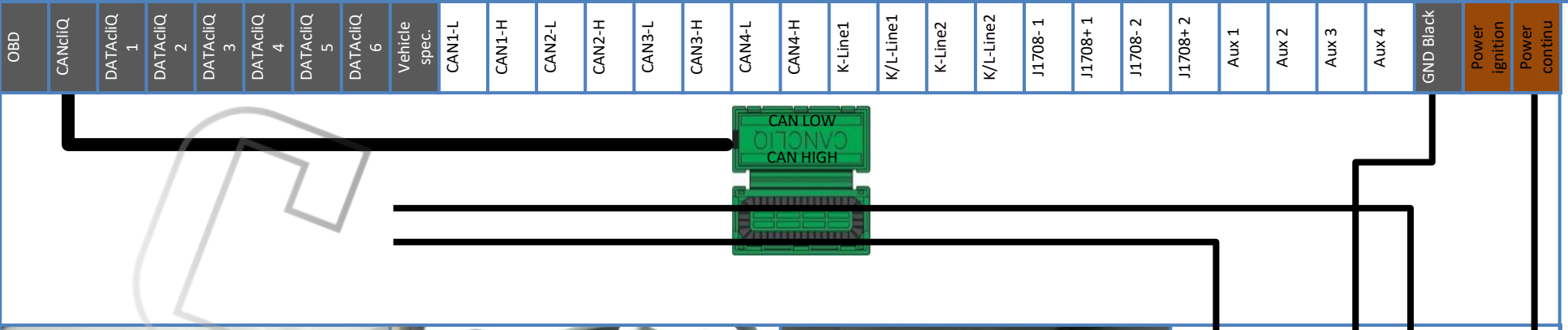

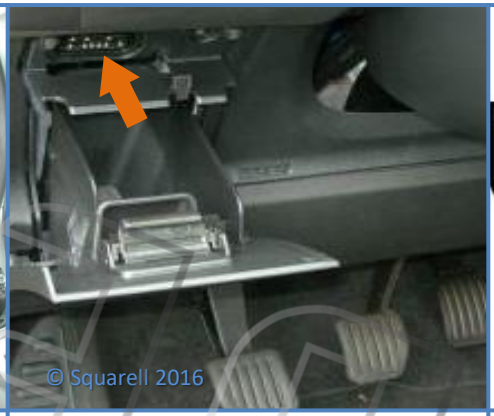

Location

Find the OBD connector at the driver side.
Located behind the left glove box.

Open up the left dashboard cover to find the OBD connector.
Remove the OBD connector from the clips to get access.

CANbus

Untwist the pin 6 and 14 wires.

Place the wire of pin 6 in the CAN High Slot.
Place the wire of pin 14 in the CAN Low slot.
Close CANcliQ.

Power + Ground
Connections in OBD Connector

Ground (KL31) :
OBD connector pin 4 and pin 5

Continuous Power (KL30) :
Pin 16 OBD connector

Warning! CANcliQ or DatacliQ closes only once. Please repower the Squarell Device after the installation is completed. Please connect Squarell devices to a 10V to 30V power supply. Please use certified crimping tools to connect the wires.

Ford Mondeo (BA7) 2007 - 2014

A B C D E F G H I J K L M N O P Q R S T U V W X Y Z

Copyright © Squarell 2016

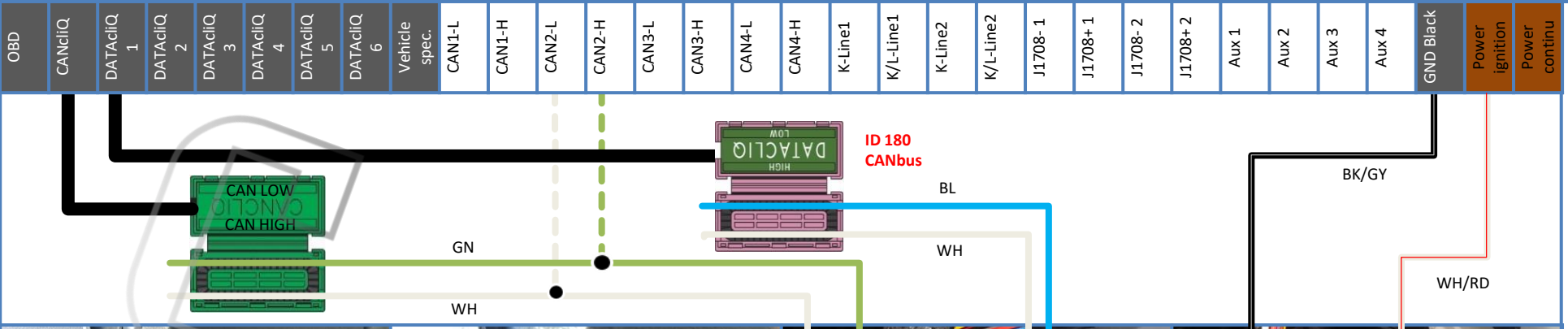

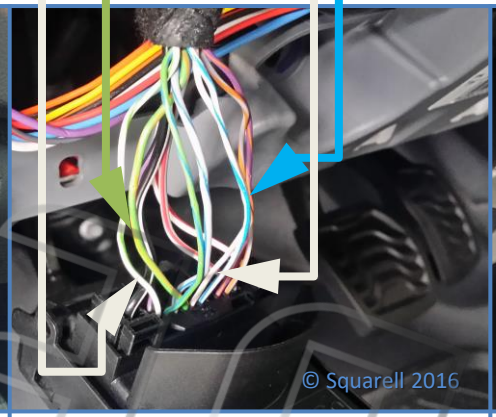

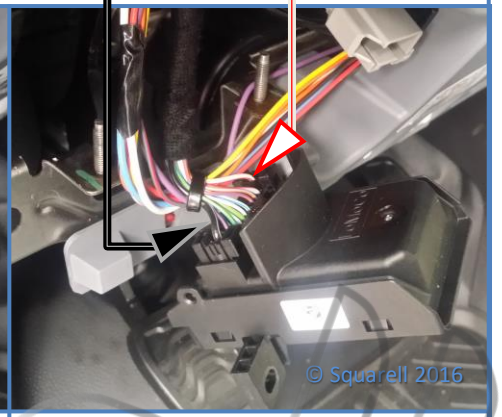

Location

Remove lower, middle and side dashboard covers at drivers side to come to the OBD.

The connector at the backside of the OBD contains the CANbus lines.

Untwist the White (pin 15) and Green (pin 16) wires.
Place the White wire (pin 15) in the CAN Low slot.
Place the Green wire (pin 16) in the CAN High slot.
Close the CANcliQ.

Untwist the White (pin 19) and Blue (pin 20) wires.
Place the White wire (pin 19) in the CAN Low Slot.
Place the Blue wire (pin 20) in the CAN High slot.
Close the DataCliQ (ID180).

Power + Ground
OBD backside connector

Ground (KL31) :
Pin 1 Black/Grey Wire

Power on ignition (KL15) :
Pin 13 White/Red wire.

Warning! CANcliQ or DatacliQ closes only once. Please repower the Squarell Device after the installation is completed. Please connect Squarell devices to a 10V to 30V power supply. Please use certified crimping tools to connect the wires.

Ford Mondeo (C) 2014 +

A B C D E F G H I J K L M N O P Q R S T U V W X Y Z

Copyright © Squarell 2016

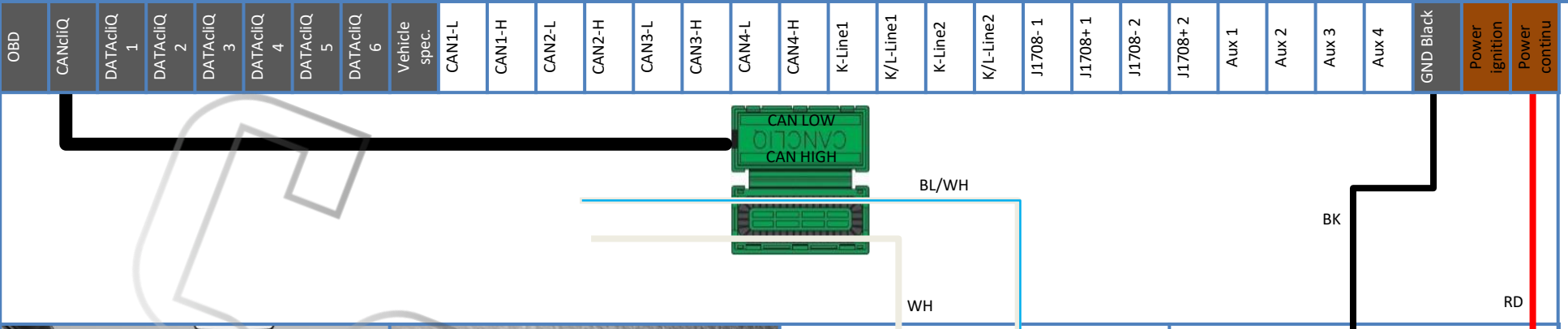

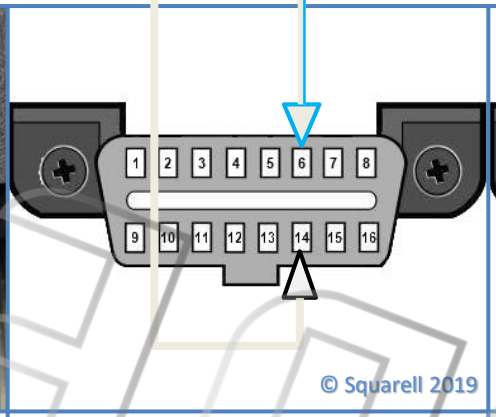

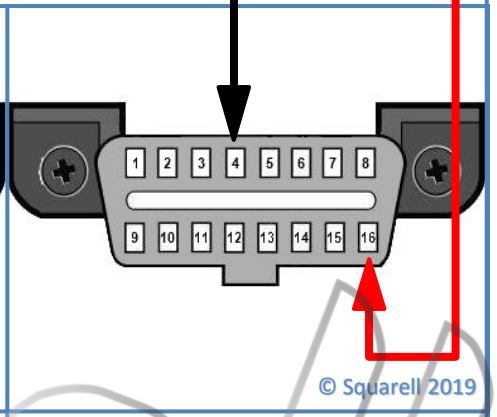

Location

The CANbus is located under the driver side dashboard at the OBD connector (Orange arrow).

Find the OBD connector underneath the driver side dashboard(Orange arrow).

CANbus Connection

Place the White-Blue wire of OBD Pin 6 in the CAN High Slot.
Place the White wire of OBD Pin 14 in the CAN Low slot.

Close the CANcliQ housing.

Power + Ground
OBD Connector.

Ground (KL31) :
OBD Pin 4 or 5(Black arrow).

Continuous Power (KL30) :
OBD Pin 16 (Red arrow).

Warning! CANcliQ or DatacliQ closes only once. Please repower the Squarell Device after the installation is completed. Please connect Squarell devices to a 10V to 30V power supply. Please use certified crimping tools to connect the wires.

Ford Taurus MK6 2010-2017

A B C D E F G H I J K L M N O P Q R S T U V W X Y Z

Copyright © Squarell 2019

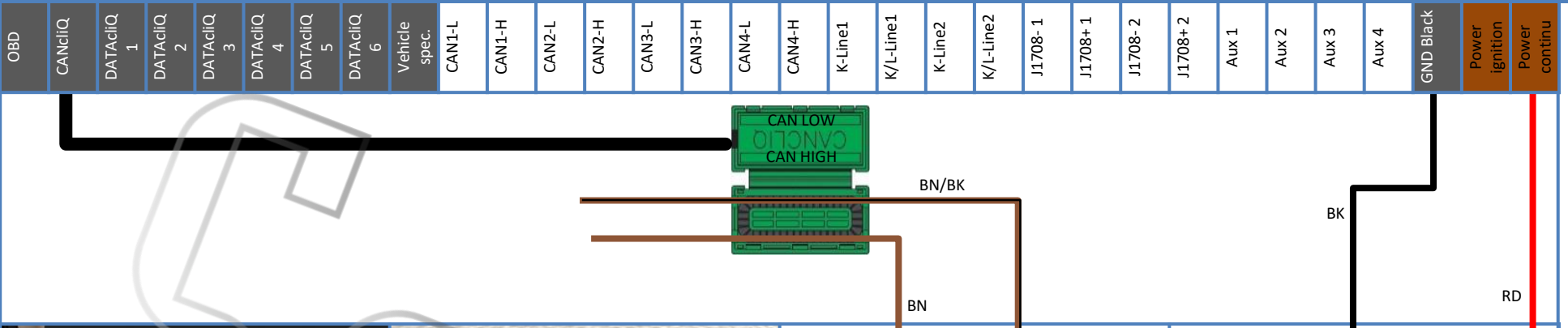

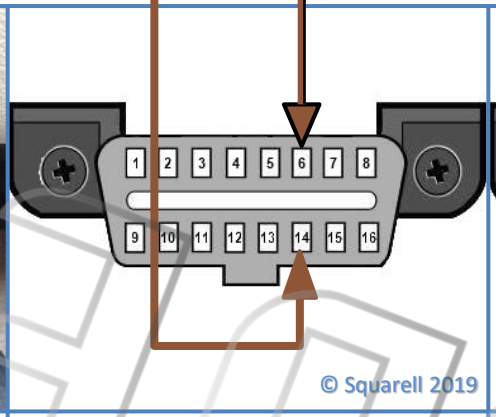

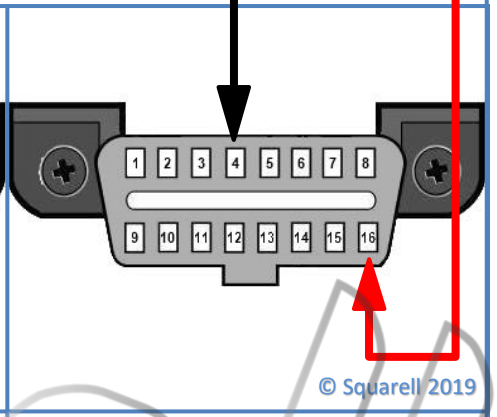

Location

The CANbus is located under the driver side dashboard at the OBD connector (Orange arrow).

Find the OBD connector underneath the driver side dashboard(Orange arrow).

CANbus Connection

Place the Brown-Black wire of OBD Pin 6 in the CAN High Slot.
Place the White wire of OBD Pin 14 in the CAN Low slot.

Close the CANcliQ housing.

Power + Ground
OBD Connector.

Ground (KL31) :
OBD Pin 4 or 5(Black arrow).

Continuous Power (KL30) :
OBD Pin 16 (Red arrow).

Warning! CANcliQ or DatacliQ closes only once. Please repower the Squarell Device after the installation is completed. Please connect Squarell devices to a 10V to 30V power supply. Please use certified crimping tools to connect the wires.

GMC Yukon 2007-2014 (3rd gen)

A B C D E F G H I J K L M N O P Q R S T U V W X Y Z

Copyright © Squarell 2019

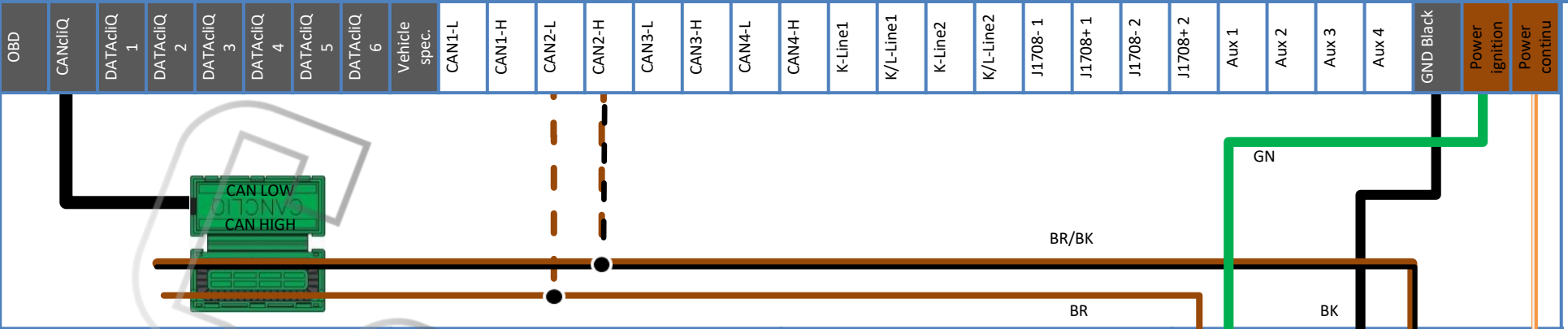

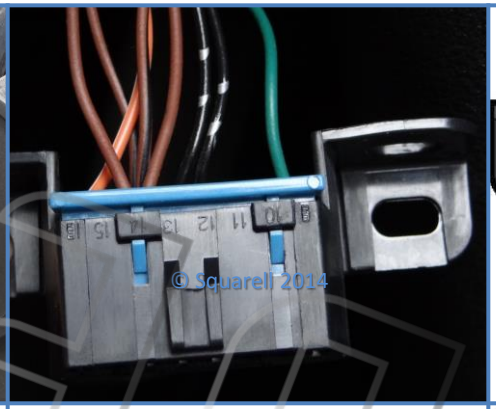

Location

The OBD connector is located at the cover under the steering wheel (Orang arrow).

Location

Find the OBD Connector and disconnect it from its socket (orange arrow).

CANbus

Untwist wires on OBD Connector pin 6 & 14.
Place Brown Black wire (pin 6) in CAN High.
Place brown wire (pin 14) in CAN Low.
Close CANcliQ.

Power + Ground

Connections at backside of the OBD Connector.

Ground (KL31) :
OBD Connector pin 4 & 5 (Black arrow)

Continuous Power (KL30) :
OBD Connector pin 16 (Yellow/ white arrow)

Power on Ignition (KL15) :
Wire color Pink/Blue (Green arrow)

Warning! CANcliQ closes only once. Please connect Squarell devices to a 10V to 48V power supply. Please use certified crimping tools to connect the wires.

Holden Commodore (VE) 2006-2013

A B C D E F G H I J K L M N O P Q R S T U V W X Y Z

Copyright © Squarell 2014

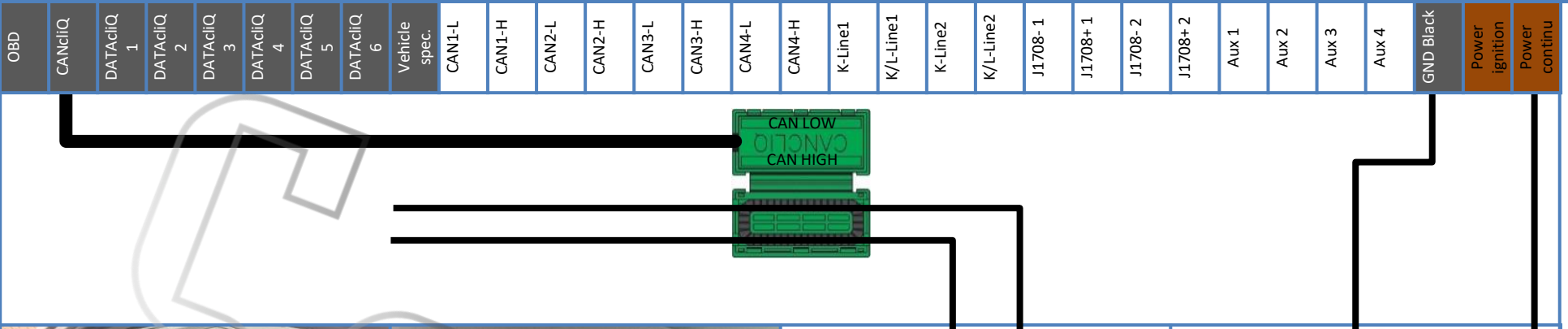

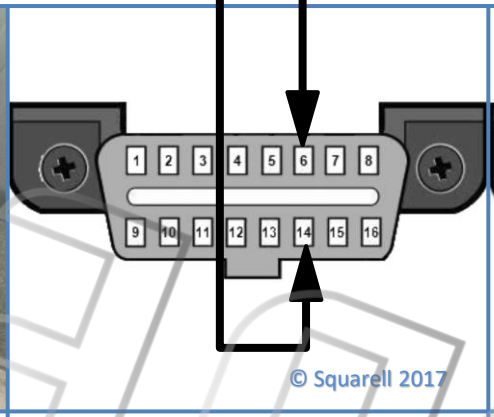

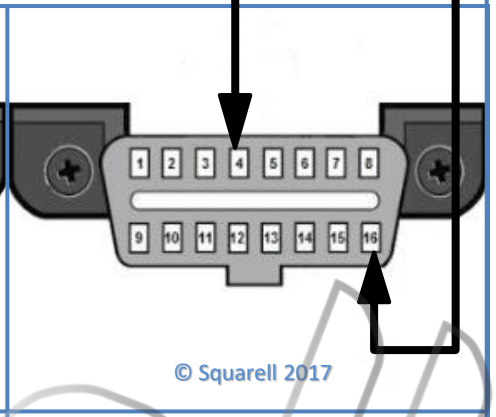

Location

Find the OBD connector at the driver side. Located underneath the dashboard on the left side.

Remove the OBD connector from the clips to get access.

CANbus

Untwist the pin 6 and pin 14 wires.

Place the wire from pin 6 in the CAN High Slot.
Place the wire from pin 14 in the CAN Low slot.
Close CANcliQ.

Power + Ground
Connections in OBD connector

Ground (KL31) :
OBD connector pin 4 wire and pin 5

Continuous Power (KL30) :
Pin 16 wire OBD connector

Warning! CANcliQ or DatacliQ closes only once. Please repower the Squarell Device after the installation is completed. Please connect Squarell devices to a 10V to 30V power supply. Please use certified crimping tools to connect the wires.

Holden Volt (1st gen) 2011-2015

A B C D E F G H I J K L M N O P Q R S T U V W X Y Z

Copyright © Squarell 2016

OBD	CANcliQ	DATAcliQ 1	DATAcliQ 2	DATAcliQ 3	DATAcliQ 4	DATAcliQ 5	DATAcliQ 6	Vehicle spec.	CAN1-L	CAN1-H	CAN2-L	CAN2-H	CAN3-L	CAN3-H	CAN4-L	CAN4-H	K-Line1	K/L-Line1	K-Line2	K/L-Line2	J1708- 1	J1708+ 1	J1708- 2	J1708+ 2	Aux 1	Aux 2	Aux 3	Aux 4	GND Black	Power ignition	Power continu

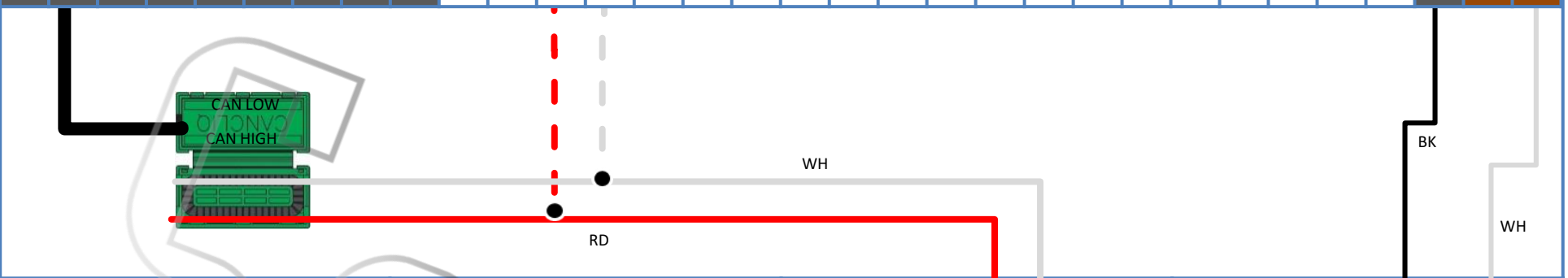

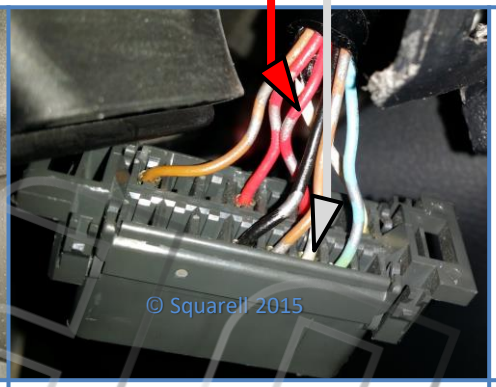

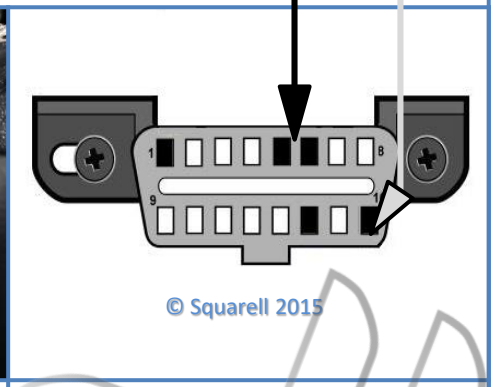

Location

At the driver side, find the OBD connector under the dashboard cover.

Location

Remove the OBD connector from the socket. The OBD connector is located above the pedals and next to the fuse box.

CANbus

Untwist White & Red wires (Pin 6 & 14 of the OBD connect)
Place White wire in CAN High slot.
Place Red wire in CAN Low slot.
Close CANcliQ .

Power + Ground

Connections at backside of the OBD Connector.

Ground (KL31) :
OBD Connector pin 4 & 5 (Black arrow)

Continuous Power (KL30) :
OBD Connector pin 16 (White arrow).

Power at ignition (KL15) :
Can be found at the back of the Fuse box under dashboard near the OBD connector.

Warning! CANcliQ or DatacliQ closes only once. Please repower the Squarell Device after the installation is completed. Please connect Squarell devices to a 10V to 30V power supply. Please use certified crimping tools to connect the wires

Honda Civic (FD3) 2008-2012

A B C D E F G H I J K L M N O P Q R S T U V W X Y Z

Copyright © Squarell 2015

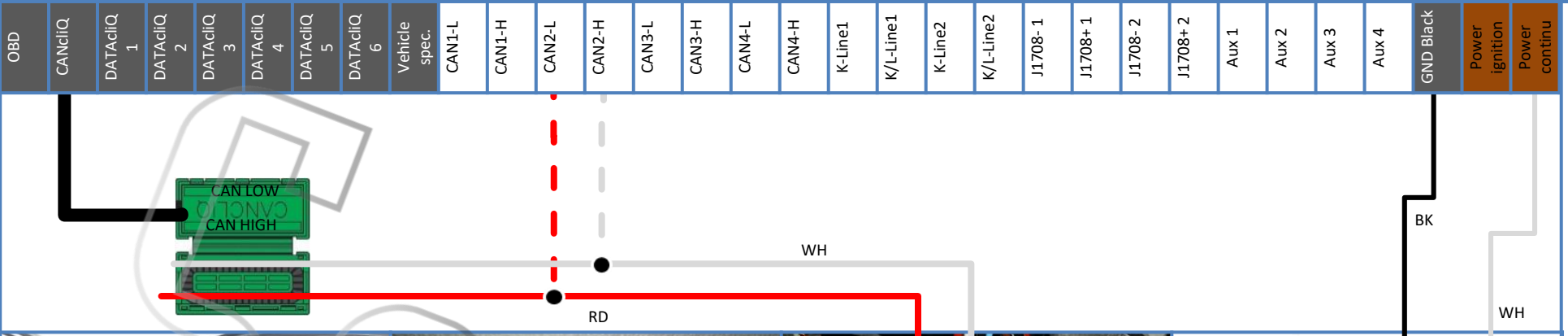

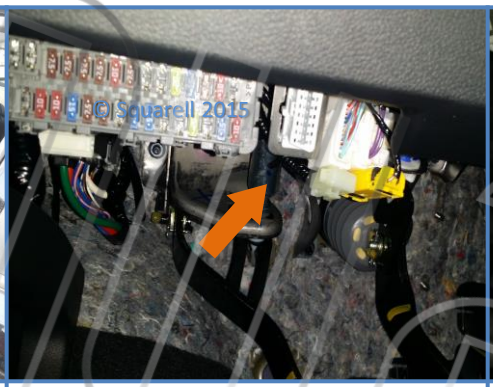

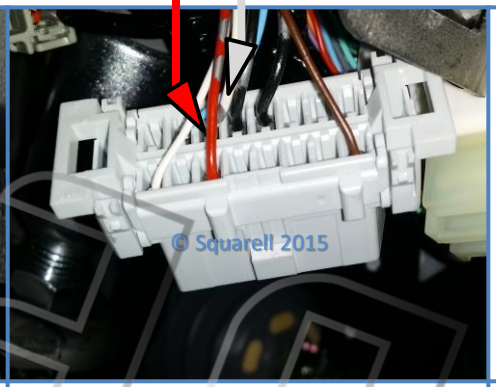

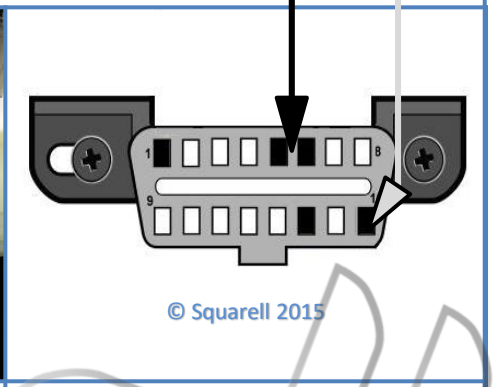

Location

At the driver side, find the OBD connector under the dashboard cover.

Location Power at ignition (KL15)

This is found at the back of the fuse box (see above picture).

CANbus

Remove the OBD connector from the socket. The OBD connector is located above the pedals and besides the fuse box.

Untwist White & Red wires (Pin 6 & 14 of the OBD connect)
Place White wire in CAN High slot.
Place Red wire in CAN Low slot.
Close CANcliQ .

Power + Ground

Connections at backside of the OBD Connector.

Ground (KL31) :
OBD Connector pin 4 & 5 (Black arrow)

Continuous Power (KL30) :
OBD Connector pin 16 (White arrow).

Power at ignition (KL15) :
Can be found at the back of the Fuse box (Picture 2 of the manual).

Warning! CANcliQ or DatacliQ closes only once. Please repower the Squarell Device after the installation is completed. Please connect Squarell devices to a 10V to 30V power supply. Please use certified crimping tools to connect the wires

Honda Civic (FK3) 2011-2016

A B C D E F G H I J K L M N O P Q R S T U V W X Y Z

Copyright © Squarell 2015

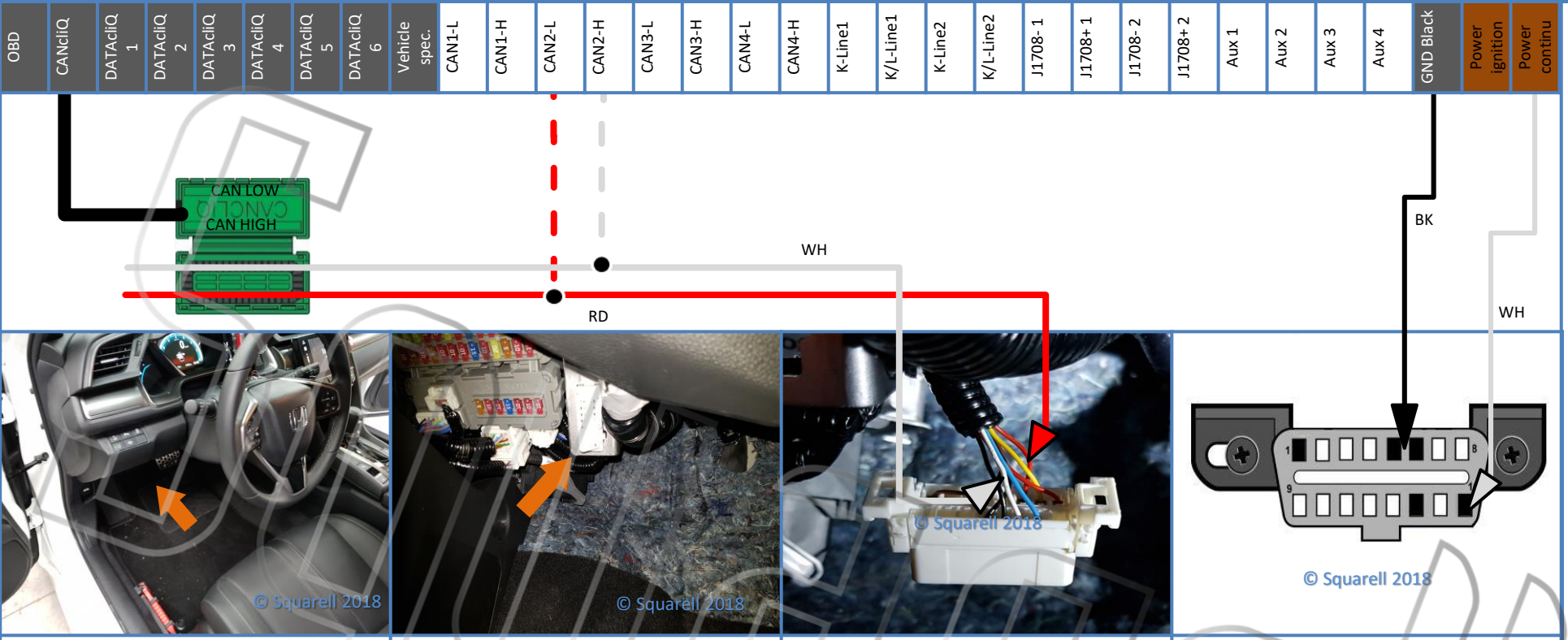

Location

At the driver side, find the OBD connector under the dashboard cover.

Location Power at ignition (KL15)

This is found at the back of the fuse box (see above picture).

CANbus

Remove the OBD connector from the socket. The OBD connector is located above the pedals and besides the fuse box.

Untwist White & Red wires (Pin 6 & 14 of the OBD connect)
Place White wire in CAN High slot.
Place Red wire in CAN Low slot.
Close CANcliQ .

Power + Ground

Connections at backside of the OBD Connector.

Ground (KL31) :
OBD Connector pin 4 & 5 (Black arrow)

Continuous Power (KL30) :
OBD Connector pin 16 (White arrow).

Power at ignition (KL15) :
Can be found at the back of the Fuse box (Picture 2 of the manual).

Warning! CANcliQ or DatacliQ closes only once. Please repower the Squarell Device after the installation is completed. Please connect Squarell devices to a 10V to 30V power supply. Please use certified crimping tools to connect the wires

Honda Civic (FC) 2017+

A B C D E F G H I J K L M N O P Q R S T U V W X Y Z

Copyright © Squarell 2015

OBD	CANcliQ	DATAcliQ 1	DATAcliQ 2	DATAcliQ 3	DATAcliQ 4	DATAcliQ 5	DATAcliQ 6	Vehicle spec.	CAN1-L	CAN1-H	CAN2-L	CAN2-H	CAN3-L	CAN3-H	CAN4-L	CAN4-H	K-Line1	K/L-Line1	K-Line2	K/L-Line2	J1708- 1	J1708+ 1	J1708- 2	J1708+ 2	Aux 1	Aux 2	Aux 3	Aux 4	GND Black	Power ignition	Power continu

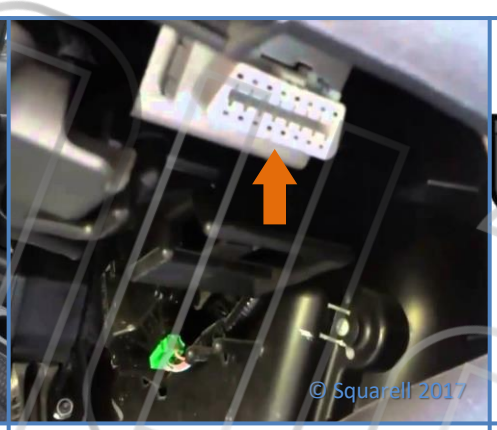

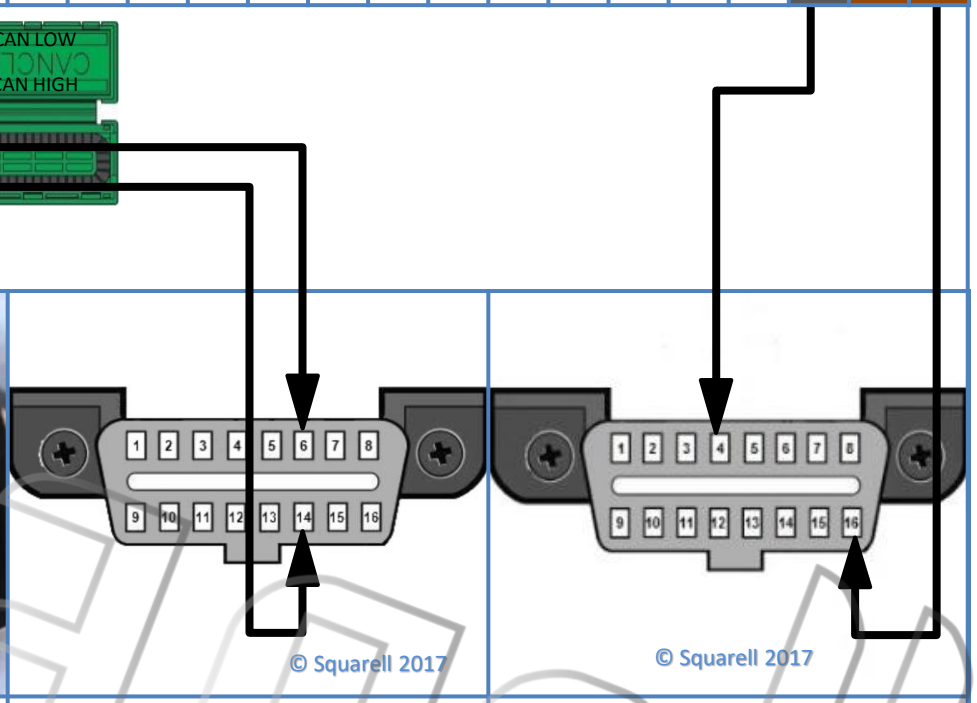

Location

Find the OBD connector at the driver side. Located underneath the dashboard on the right side.

Remove the OBD connector from the clips to get access.

CANbus

Untwist the pin 6 and pin 14 wires.

Place the wire from pin 6 in the CAN High Slot.
Place the wire from pin 14 in the CAN Low slot.
Close CANcliQ.

Power + Ground
Connections in OBD connector

Ground (KL31) :
OBD connector pin 4 wire and pin 5

Continuous Power (KL30) :
Pin 16 wire OBD connector

Warning! CANcliQ or DatacliQ closes only once. Please repower the Squarell Device after the installation is completed. Please connect Squarell devices to a 10V to 30V power supply. Please use certified crimping tools to connect the wires.

Honda CR-V (RE5) 2006-2011

A B C D E F G H I J K L M N O P Q R S T U V W X Y Z

Copyright © Squarell 2016

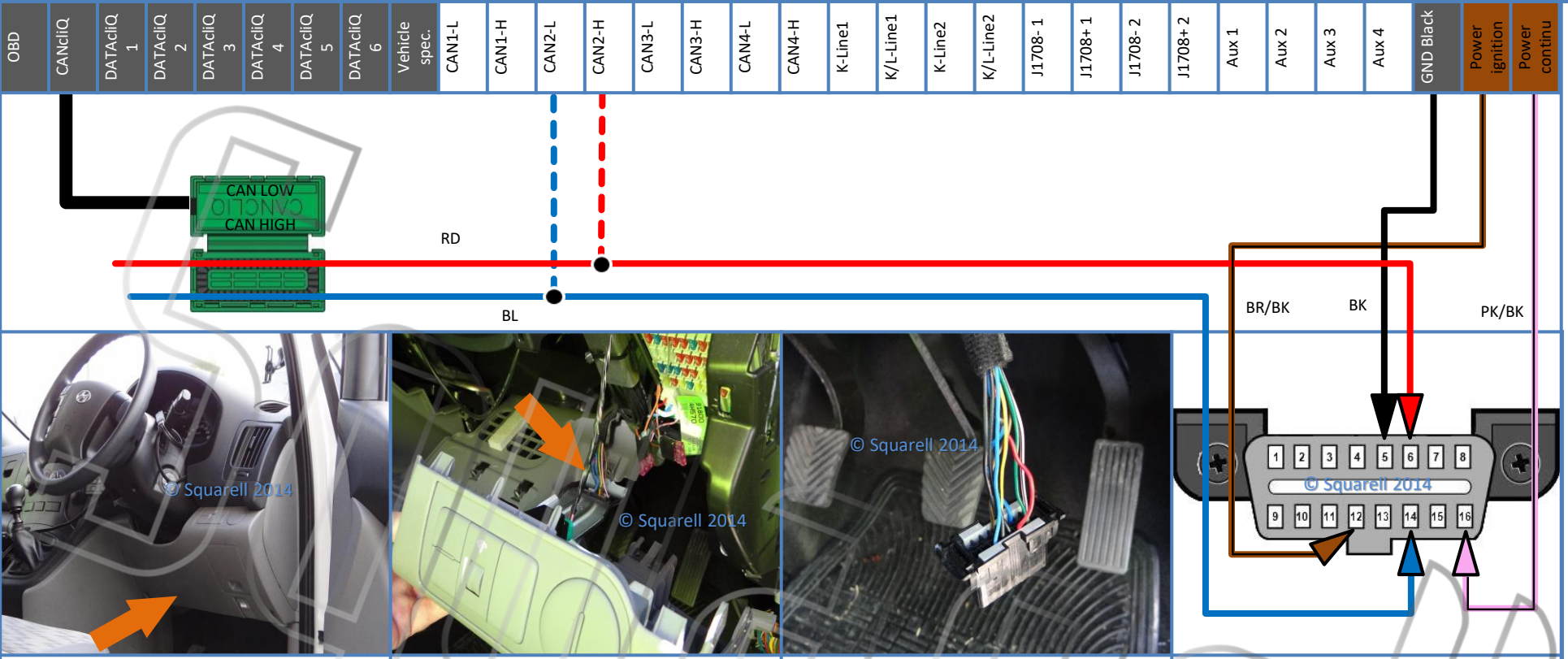

Location

Find the OBD connector and remove the cover below the steering wheel. (see Orange arrow)

CANbus

Find the OBD Connector and remove it from the cover panel (Orange arrow).

CANbus

Untwist wires Red and Blue
(Pin 6 & 14)
Place Red wire (Pin 6) in CAN High slot
Place Blue wire (pin 14) in CAN Low slot
Close CANcliQ.

Power + Ground

Connections at backside of the OBD connector.

Ground (KL31) :
Black (Black arrow)

Continuous Power (KL30) :
Pink Black wire (Pink Black arrow)

Power on Ignition (KL15) :
Brown/Black wire (Brown / Black arrow).

Warning! CANcliQ closes only once. Please connect Squarell devices to a 10V to 30V power supply. Please use certified crimping tools to connect the wires.

Hyundai H-1 Travel/ Grand Starex (TQ) 2007+

A B C D E F G H I J K L M N O P Q R S T U V W X Y Z

Copyright © Squarell 2014

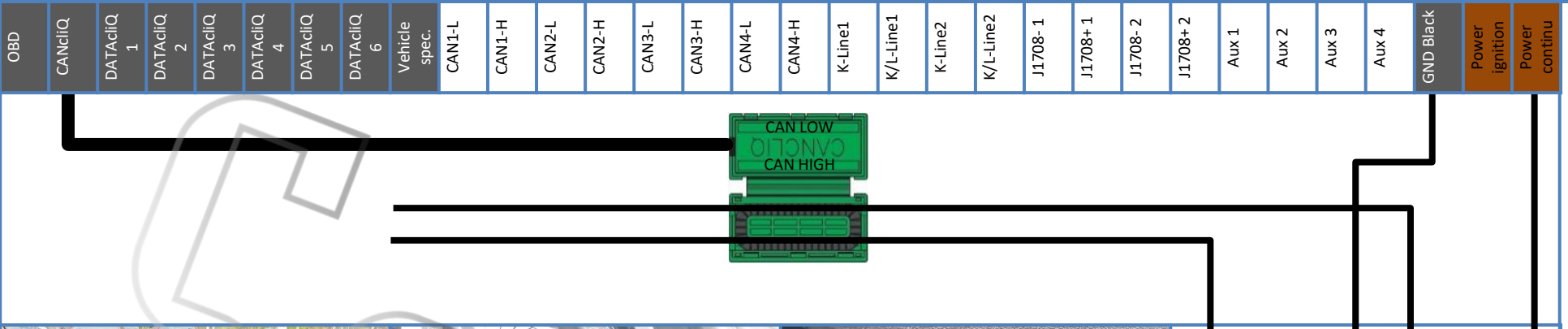

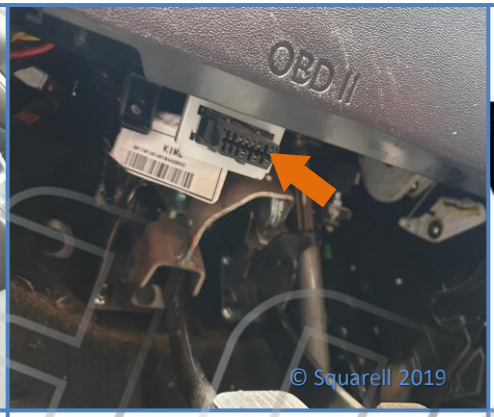

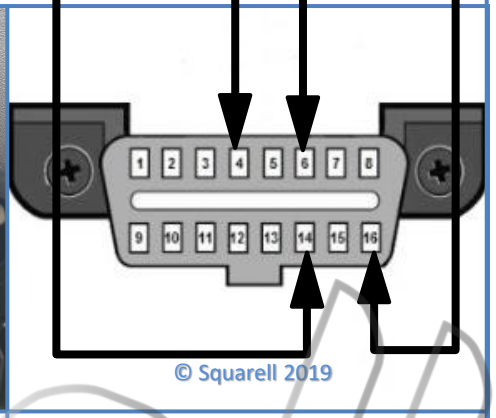

Location

Find the OBD connector at the driver side. Located underneath the dashboard on the left side.

Remove the OBD connector from the clips to get access.

CANbus

Untwist the pin 6 and pin 14 wires.

Place the wire from pin 6 in the CAN High Slot.
Place the wire from pin 14 in the CAN Low slot.
Close the CANcliQ.

Power + Ground
Connections in OBD connector

Ground (KL31) :
OBD connector pin 4 and pin 5

Continuous Power (KL30) :
Pin 16 wire OBD connector

Warning! CANcliQ or DatacliQ closes only once. Please repower the Squarell Device after the installation is completed. Please connect Squarell devices to a 10V to 30V power supply. Please use certified crimping tools to connect the wires.

Hyundai I10 (PA) 1st gen 2007-2017

A B C D E F G H I J K L M N O P Q R S T U V W X Y Z

Copyright © Squarell 2019

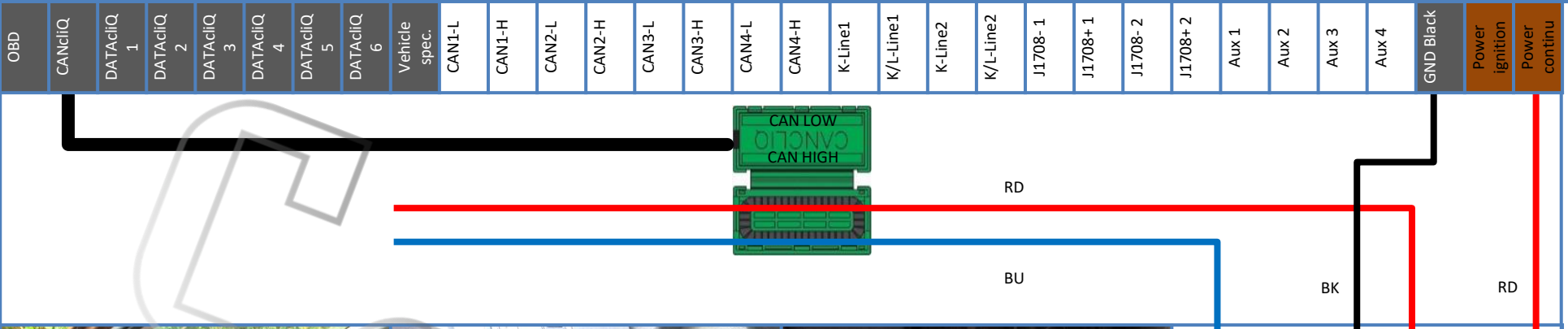

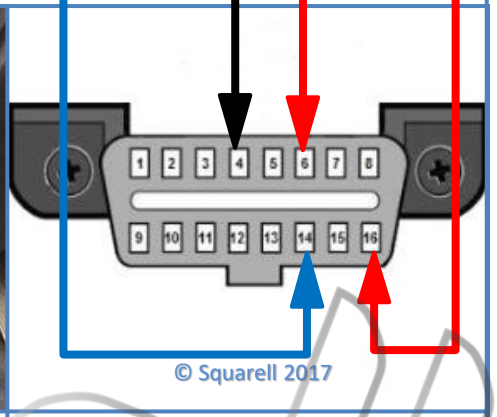

Location

Find the OBD connector at the driver side. Located behind the dashboard cover on the left side.

Remove the OBD connector from the clips to get access.

CANbus

Untwist the pin 6 Red and pin 14 Blue wires.

Place the Red wire from pin 6 in the CAN High Slot.
Place the Blue wire from pin 14 in the CAN Low slot.
Close CANcliQ.

Power + Ground
Connections in OBD connector

Ground (KL31) :
OBD connector pin 4 Black wire and pin 5

Continuous Power (KL30) :
Pin 16 Red wire OBD connector

Warning! CANcliQ or DatacliQ closes only once. Please repower the Squarell Device after the installation is completed. Please connect Squarell devices to a 10V to 30V power supply. Please use certified crimping tools to connect the wires.

Hyundai i20 (2nd gen) 2014+

A B C D E F G H I J K L M N O P Q R S T U V W X Y Z

Copyright © Squarell 2016

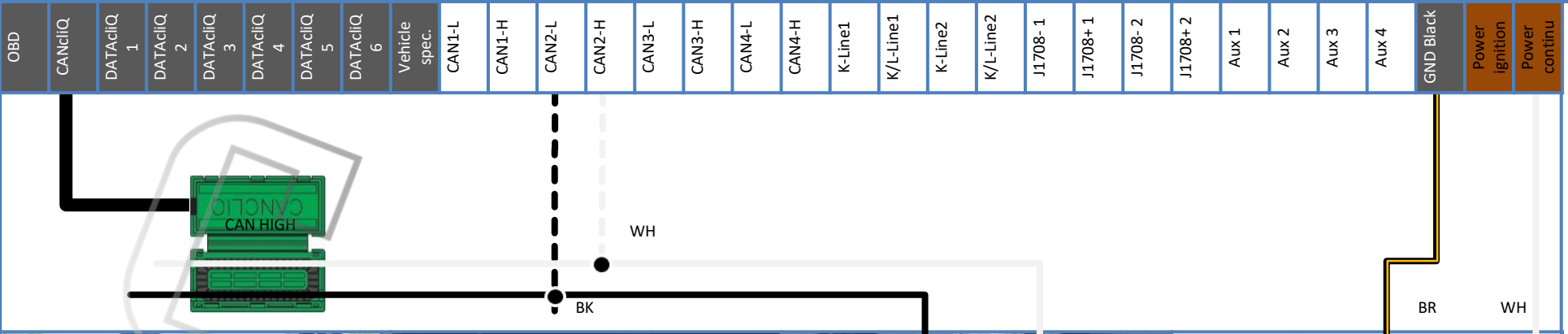

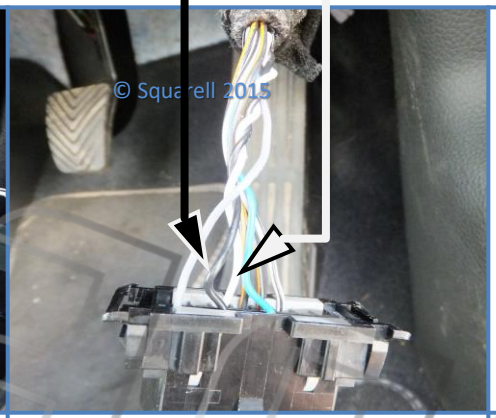

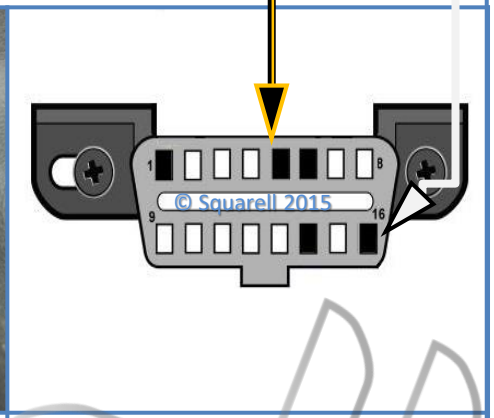

Location

Find the OBD connector at the driver side under the dashboard.

If needed, remove a piece of tape to get full access to the OBD wiring.

CANbus

Untwist the White & Black wires (pin 6 & 14) from the OBD connector.

Place White wire in CAN High slot.
Place Black wire in CAN Low slot.
Close CANcliQ.

Power + Ground

Connections at backside of OBD Connector.

Ground (KL31) :
OBD Connector pin 5 (Black Orange arrow).

Continuous Power (KL30) :
OBD Connector pin 16 (White arrow).

Power on Ignition (KL15) :
Blue wire at the fusebox behind OBD connector (not in picture).

Warning! CANcliQ or DatacliQ closes only once. Please repower the Squarell Device after the installation is completed. Please connect Squarell devices to a 10V to 30V power supply. Please use certified crimping tools to connect the wires.

Hyundai i30 (2nd gen) 2011-2016

A B C D E F G H I J K L M N O P Q R S T U V W X Y Z

Copyright © Squarell 2015

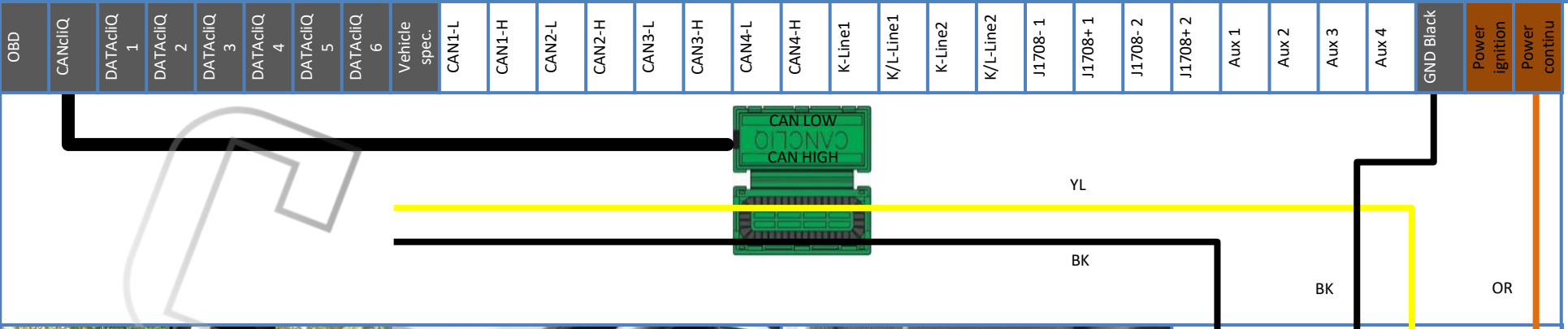

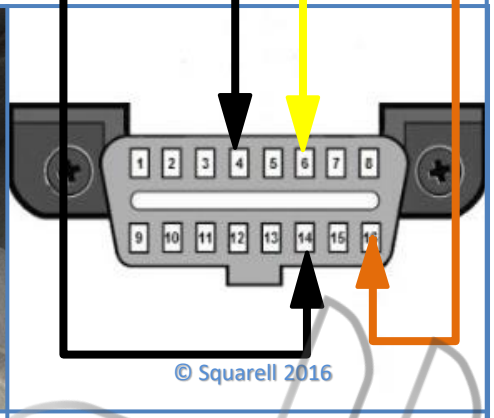

Location

Find the OBD connector at the driver side.
Located behind the left dashboard cover.

Remove the left dashboard cover to find the OBD connector.
Remove the OBD connector from the clips to get access.

CANbus

Untwist the pin 6 Yellow and pin 14 Black wires.

Place the Yellow wire pin 6 in the CAN High Slot.
Place the Black wire pin 14 in the CAN Low slot.
Close CANcliQ.

Power + Ground
Connections in OBD Connector

Ground (KL31) :
OBD connector pin 4 Black wire and pin 5

Continuous Power (KL30) :
Pin 16 Orange wire OBD connector

Warning! CANcliQ or DatacliQ closes only once. Please repower the Squarell Device after the installation is completed. Please connect Squarell devices to a 10V to 30V power supply. Please use certified crimping tools to connect the wires.

Hyundai i40 (1st gen) 2011 +

Copyright © Squarell 2016

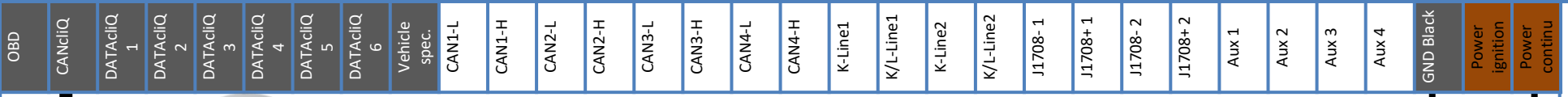

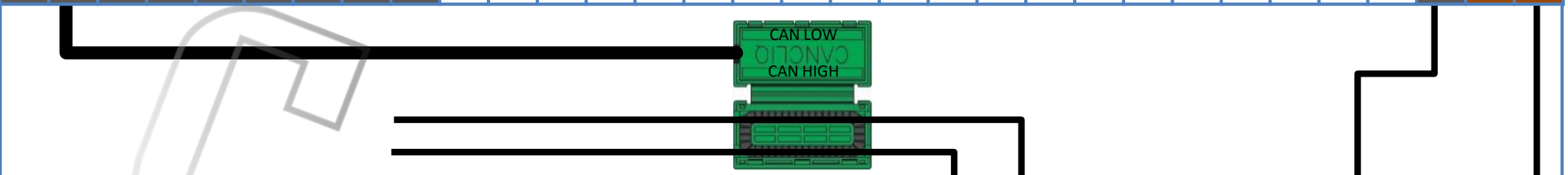

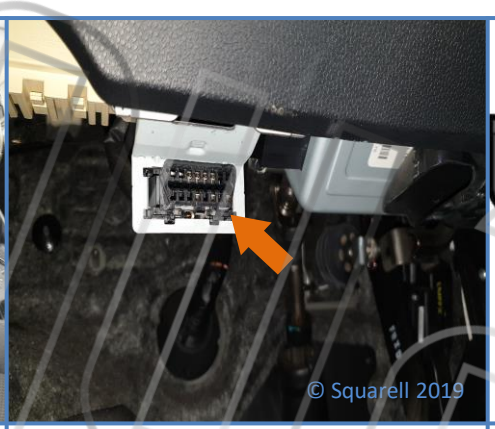

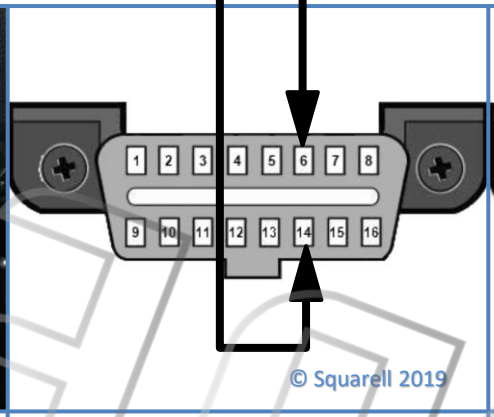

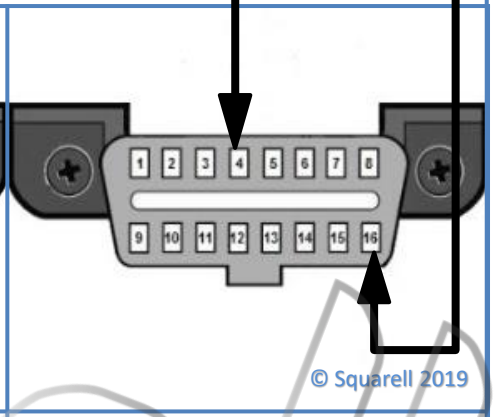

Location

Find the OBD connector at the driver side. Located underneath the dashboard on the left side.

Remove the OBD connector from the clips to get access.

CANbus

Untwist the pin 6 and pin 14 wires.

Place the wire from pin 6 in the CAN High Slot.
Place the wire from pin 14 in the CAN Low slot.

Close CANcliQ.

Power + Ground
Connections in OBD connector

Ground (KL31) :
OBD connector pin 4 wire and pin 5

Continuous Power (KL30) :
Pin 16 wire OBD connector

Warning! CANcliQ or DatacliQ closes only once. Please repower the Squarell Device after the installation is completed. Please connect Squarell devices to a 10V to 30V power supply. Please use certified crimping tools to connect the wires.

Hyundai ix35 (LM) 2009-2015

A B C D E F G H I J K L M N O P Q R S T U V W X Y Z

Copyright © Squarell 2019

OBD	CANcliQ	DATAcliQ 1	DATAcliQ 2	DATAcliQ 3	DATAcliQ 4	DATAcliQ 5	DATAcliQ 6	Vehicle spec.	CAN1-L	CAN1-H	CAN2-L	CAN2-H	CAN3-L	CAN3-H	CAN4-L	CAN4-H	K-Line1	K/L-Line1	K-Line2	K/L-Line2	J1708- 1	J1708+ 1	J1708- 2	J1708+ 2	Aux 1	Aux 2	Aux 3	Aux 4	GND Black	Power ignition	Power continu

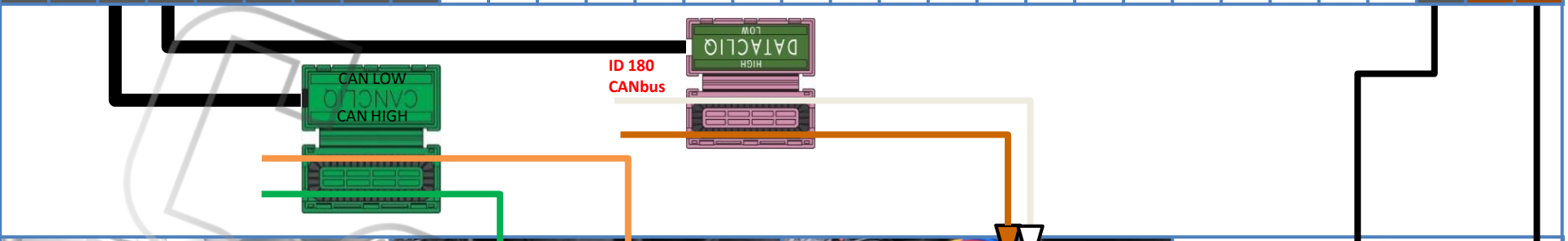

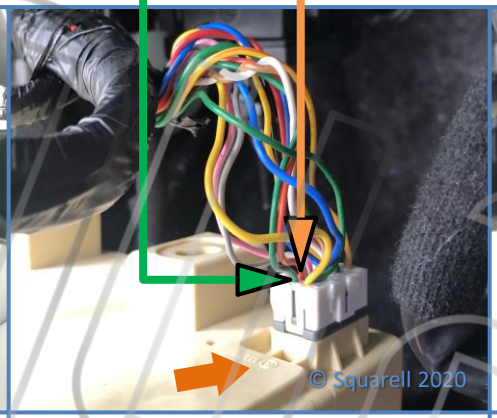

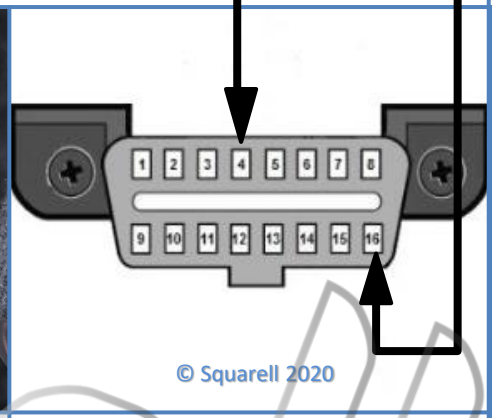

Location

Remove the panel covering the fusebox and remove the panel below the steering wheel.

CANBUS CANcliQ

On the backside of the fusebox.
A white connector labeled “G” can be found. (See orange arrow)

Place the Orange wire in the CAN High Slot.
Place the Green wire in the CAN Low slot.
Close CANcliQ.

It is possible to remove the connector on the back to get more space. **Always turn the ignition OFF before unplugging the connector to avoid errors.**

CANbus

Untwist the White and Brown wires and for the ID180 connection.

ID.180
Place the White wire in the CAN High Slot.
Place the Brown wire in the CAN Low slot.
Close DATAcliQ.

Power + Ground
Connections in OBD connector

Ground (KL31) :
OBD connector pin 4 Black wire and pin 5

Continuous Power (KL30) :
Pin 16 White wire OBD connector

Warning! CANcliQ or DatacliQ closes only once. Please repower the Squarell Device after the installation is completed. Please connect Squarell devices to a 10V to 30V power supply. Please use certified crimping tools to connect the wires.
Note: The facelift version can be recognised from the front grill or steering wheel.

Hyundai IoniQ EV (2018+)

Copyright © Squarell 2020

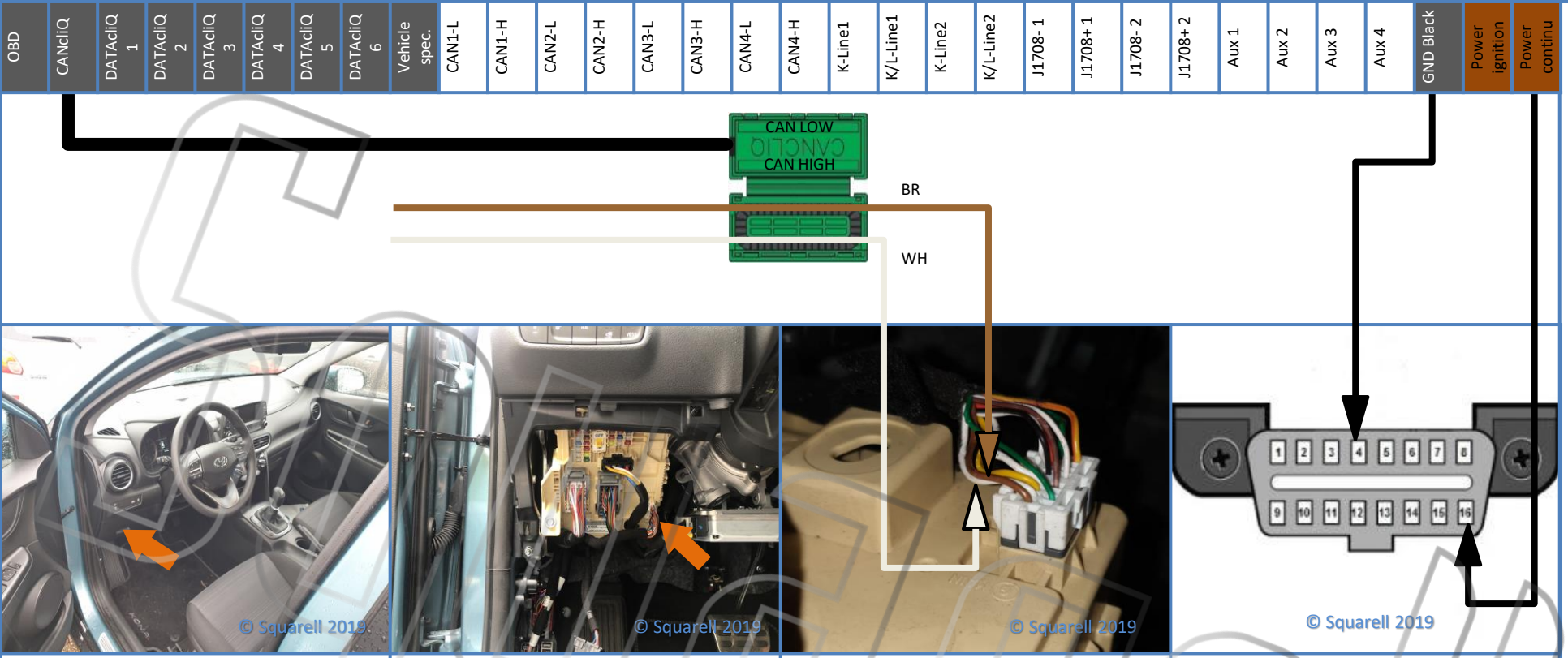

Location

Find the gateway on the left of the driver side located behind the fusebox cover.

Remove the dashboard cover by loosening the screws at the bottom.

After removal of the dashboard cover you'll see the screws holding the gateway in place. They are situated on top the of the gateway. When loosened the gateway should flip forward revealing the backside connectors.

CANbus

The CANbus is located at the "G" connector.

Untwist the Pin 3 Brown & Pin 2 White wires.

Place the Pin 3 Brown wire in the CAN high slot.
Place the Pin 2 White wire in the CAN high slot.
Close the CANcliQ.

Power + Ground
Connections in OBD connector

Ground (KL31) :
OBD connector pin 4 and pin 5

Continuous Power (KL30) :
Pin 16 wire OBD connector

Warning! CANcliQ or DatacliQ closes only once. Please repower the Squarell Device after the installation is completed. Please connect Squarell devices to a 10V to 30V power supply. Please use certified crimping tools to connect the wires.

Hyundai Kona (1st gen) 2017+

A B C D E F G H I J K L M N O P Q R S T U V W X Y Z

Copyright © Squarell 2019

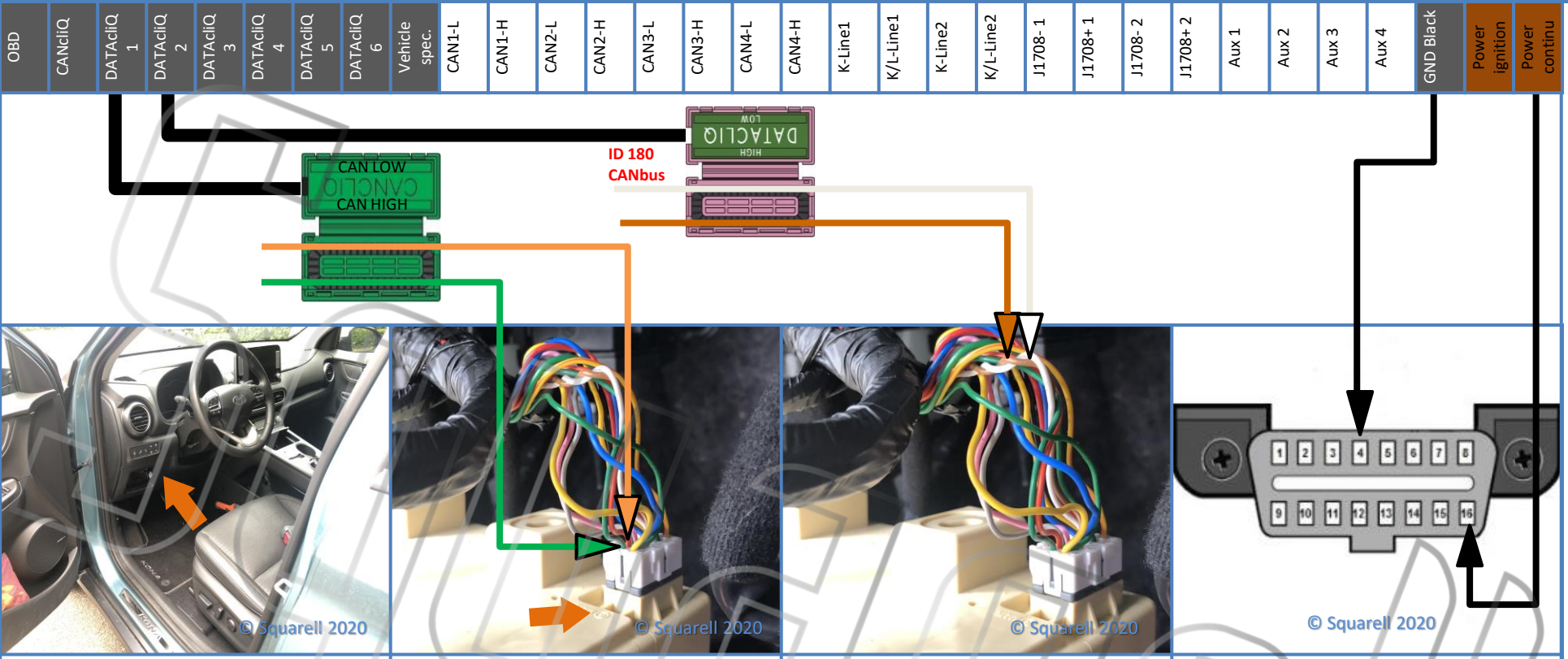

Location

Remove the panel covering the fusebox and the panel around it.

CANBUS CANcliQ

On the backside of the fusebox.
A white connector labeled “G” can be found.
(See orange arrow)

Place the Orange wire in the CAN High Slot.
Place the Green wire in the CAN Low slot.
Close CANcliQ.

It is possible to remove the connector on the back to get more space. **Always turn the ignition OFF before unplugging the connector to avoid errors.**

CANbus

Untwist the White and Brown wires and for the ID180 connection.

ID.180
Place the White wire in the CAN High Slot.
Place the Brown wire in the CAN Low slot.
Close DATAcliQ.

Power + Ground
Connections in OBD connector

Ground (KL31) :
OBD connector pin 4 Black wire and pin 5

Continuous Power (KL30) :
Pin 16 White wire OBD connector

Warning! CANcliQ or DatacliQ closes only once. Please repower the Squarell Device after the installation is completed. Please connect Squarell devices to a 10V to 30V power supply. Please use certified crimping tools to connect the wires.
Note: The facelift version can be recognised from the front grill or steering wheel.

Hyundai Kona EV (2019+)

A B C D E F G H I J K L M N O P Q R S T U V W X Y Z

Copyright © Squarell 2020

OBD	CANcliQ	DATAcliQ 1	DATAcliQ 2	DATAcliQ 3	DATAcliQ 4	DATAcliQ 5	DATAcliQ 6	Vehicle spec.	CAN1-L	CAN1-H	CAN2-L	CAN2-H	CAN3-L	CAN3-H	CAN4-L	CAN4-H	K-Line1	K/L-Line1	K-Line2	K/L-Line2	J1708- 1	J1708+ 1	J1708- 2	J1708+ 2	Aux 1	Aux 2	Aux 3	Aux 4	GND Black	Power ignition	Power continu

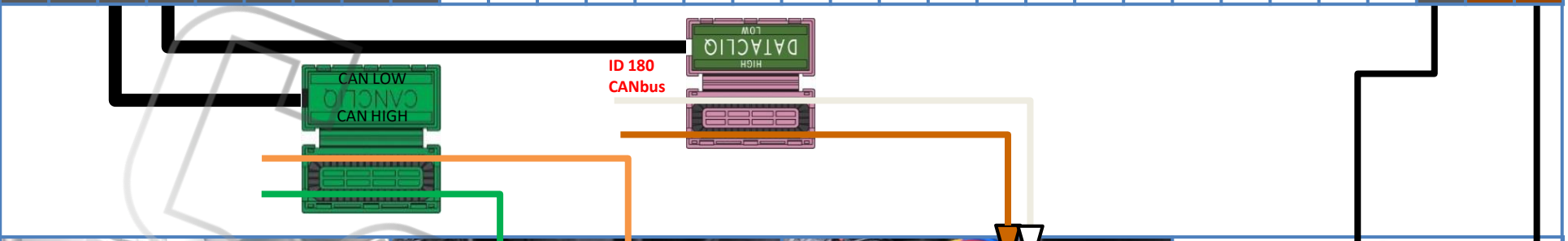

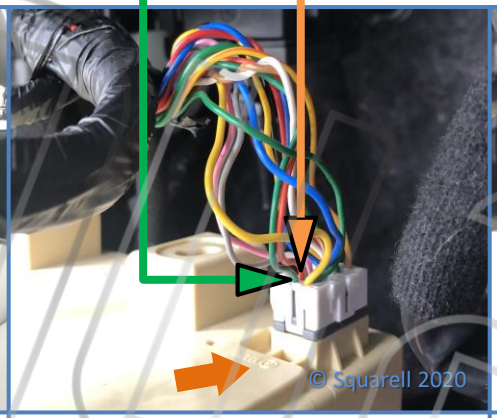

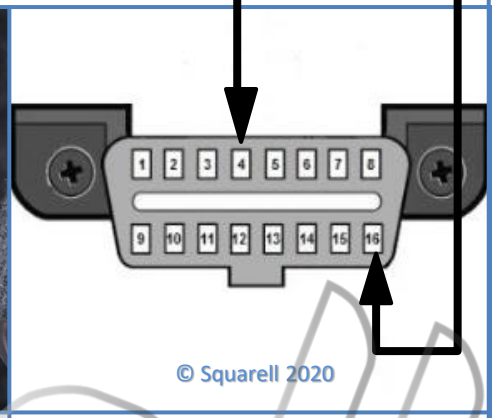

Location

Remove the panel covering the fusebox and remove the panel below the steering wheel.

CANBUS CANcliQ

On the backside of the fusebox.
A white connector labeled “G” can be found. (See orange arrow)

Place the Orange wire in the CAN High Slot.
Place the Green wire in the CAN Low slot.
Close CANcliQ.

It is possible to remove the connector on the back to get more space. **Always turn the ignition OFF before unplugging the connector to avoid errors.**

CANbus

Untwist the White and Brown wires and for the ID180 connection.

ID.180
Place the White wire in the CAN High Slot.
Place the Brown wire in the CAN Low slot.
Close DATAcliQ.

Power + Ground
Connections in OBD connector

Ground (KL31) :
OBD connector pin 4 Black wire and pin 5

Continuous Power (KL30) :
Pin 16 White wire OBD connector

Warning! CANcliQ or DatacliQ closes only once. Please repower the Squarell Device after the installation is completed. Please connect Squarell devices to a 10V to 30V power supply. Please use certified crimping tools to connect the wires.
Note: The facelift version can be recognised from the front grill or steering wheel.

Hyundai IoniQ EV (2018+)

Copyright © Squarell 2020

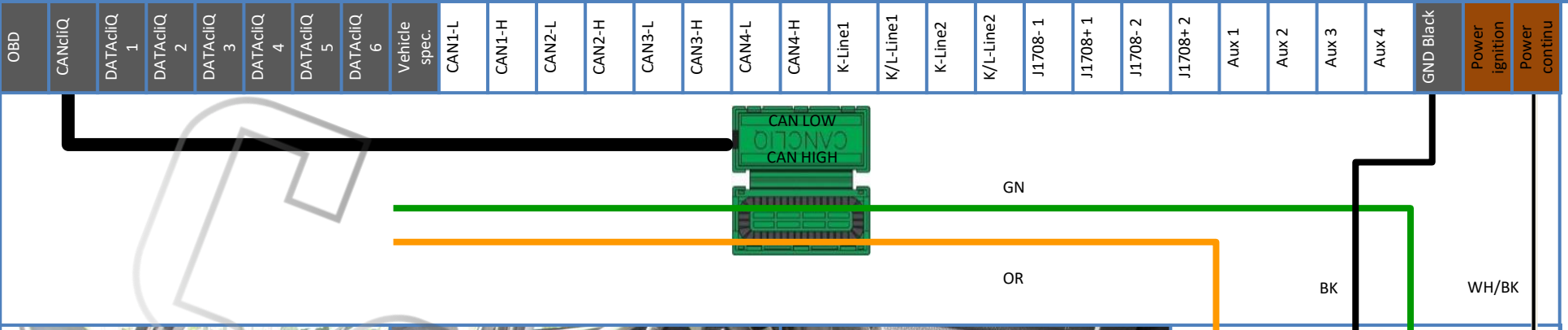

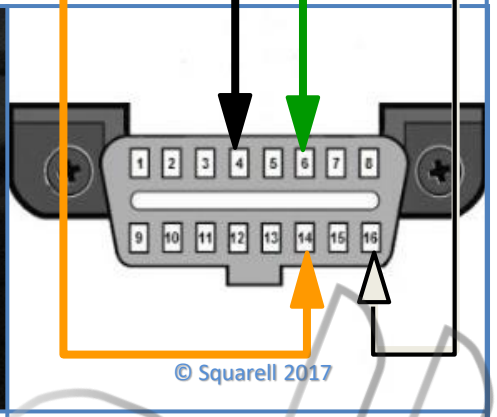

Location

Find the OBD connector at the driver side. Located behind the fusebox cover on the left side.

Remove the Fusebox cover.
Remove the OBD connector from the clips to get access.

CANbus

Untwist the pin 6 Green and pin 14 Orange wires.

Place the Green wire from pin 6 in the CAN High Slot.
Place the Orange wire from pin 14 in the CAN Low slot.
Close CANcliQ.

Power + Ground
Connections in OBD connector

Ground (KL31) :
OBD connector pin 4 Black wire and pin 5

Continuous Power (KL30) :
Pin 16 White/Black wire OBD connector

Warning! CANcliQ or DatacliQ closes only once. Please repower the Squarell Device after the installation is completed. Please connect Squarell devices to a 10V to 30V power supply. Please use certified crimping tools to connect the wires.

Hyundai Santa Fe (DM, NC) 2012-2019

A B C D E F G H I J K L M N O P Q R S T U V W X Y Z

Copyright © Squarell 2016

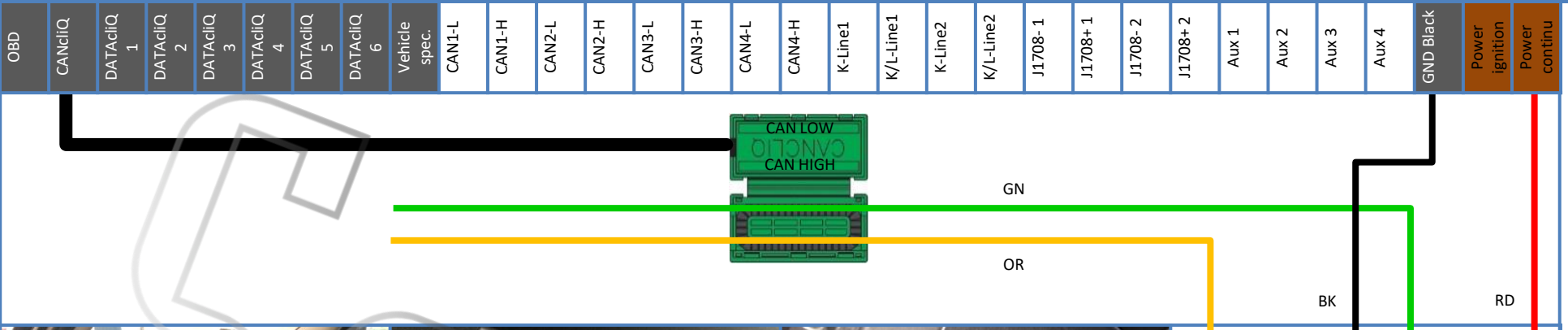

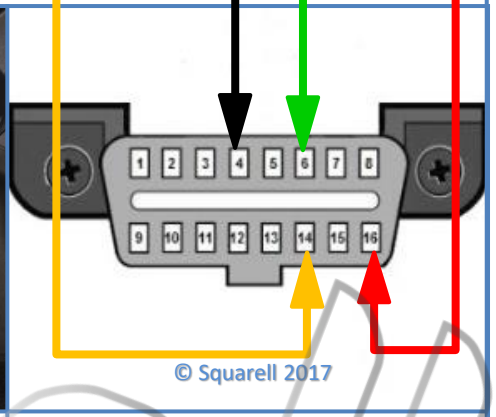

Location

Find the OBD connector which is Located at the driver side. Underneath the Dashboard next to the bonnet release lever.

Remove the OBD connector from the clips to gain access.

CANbus

Untwist the pin 6 Green and pin 14 Orange wires.

Place the Green wire from pin 6 in the CAN High Slot.
Place the Orange wire from pin 14 in the CAN Low slot.
Close CANcliQ.

Power + Ground
Connections in OBD connector

Ground (KL31) :
OBD pin 4 and 5 Black wire.

Continuous Power (KL30) :
OBD pin 16 Red wire.

Warning! CANcliQ or DatacliQ closes only once. Please repower the Squarell Device after the installation is completed. Please connect Squarell devices to a 10V to 30V power supply. Please use certified crimping tools to connect the wires.

Hyundai Tucson (JM) 2006-2010

A B C D E F G H I J K L M N O P Q R S T U V W X Y Z

Copyright © Squarell 2016

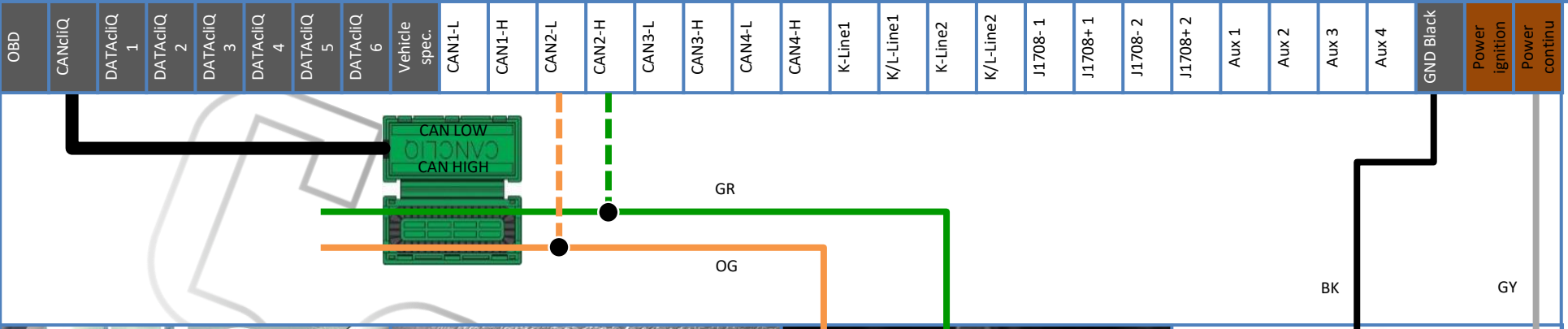

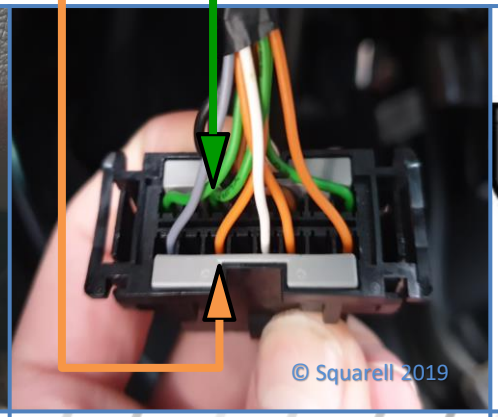

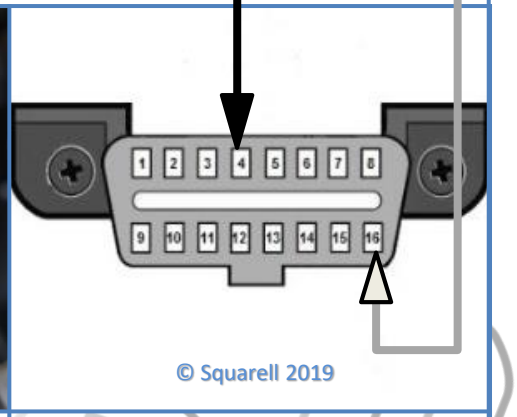

Location

Find the OBD connector at the driver side. Located underneath the dashboard on the left side.

Remove the OBD connector from the clips to get access.

CANbus

Remove a small amount of insulation tape to gain better access.

Place the green wire from pin 6 in the CAN High Slot.
Place the orange wire from pin 14 in the CAN Low slot.

Close CANcliQ.

Power + Ground
Connections in OBD connector

Ground (KL31) :
OBD connector pin 4 Black wire and pin 5

Continuous Power (KL30) :
Pin 16 Grey wire OBD connector

Warning! CANcliQ or DatacliQ closes only once. Please repower the Squarell Device after the installation is completed. Please connect Squarell devices to a 10V to 30V power supply. Please use certified crimping tools to connect the wires.

Hyundai Tucson (TL) 2015+

A B C D E F G H I J K L M N O P Q R S T U V W X Y Z

Copyright © Squarell 2019

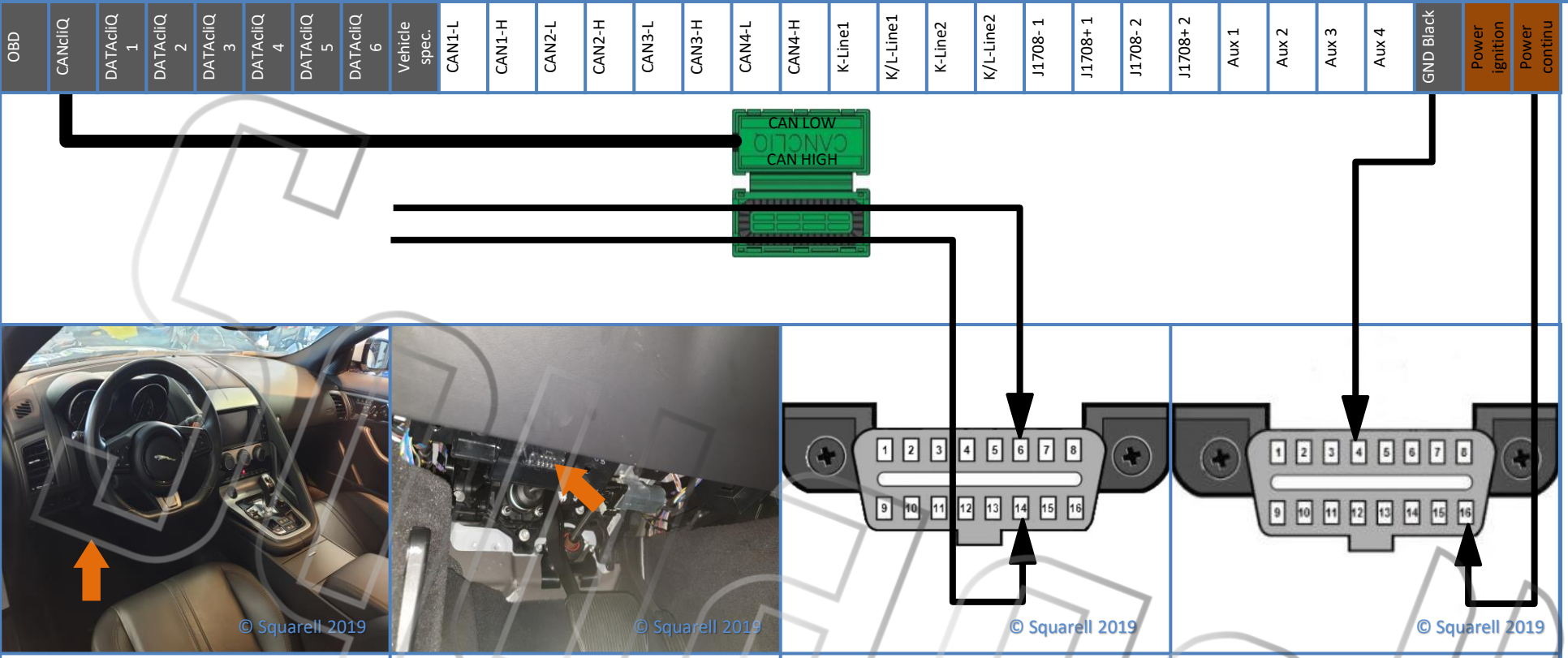

Location

Find the OBD connector at the driver side. Located underneath the dashboard on the left side.

Remove the OBD connector from the clips to get access.

CANbus

Untwist the pin 6 and pin 14 wires.

Place the wire from pin 6 in the CAN High Slot.
Place the wire from pin 14 in the CAN Low slot.

Close CANcliQ.

Power + Ground
Connections in OBD connector

Ground (KL31) :
OBD connector pin 4 wire and pin 5

Continuous Power (KL30) :
Pin 16 wire OBD connector

Warning! CANcliQ or DatacliQ closes only once. Please repower the Squarell Device after the installation is completed. Please connect Squarell devices to a 10V to 30V power supply. Please use certified crimping tools to connect the wires.

Jaguar F-Type 2013+

A B C D E F G H I J K L M N O P Q R S T U V W X Y Z

Copyright © Squarell 2019